Technical sheet :

AGRICULTURAL BUCKET

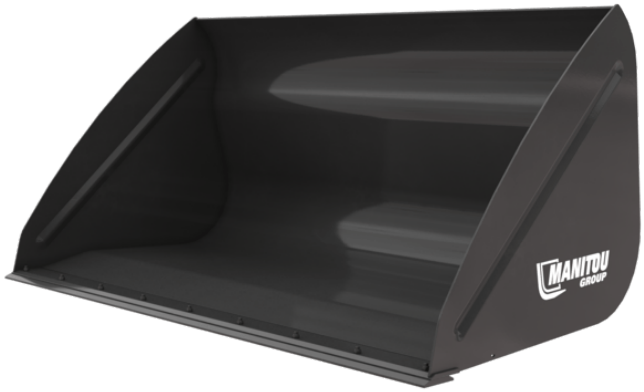

Customer benefits

- Daily use and hard working bucket.
- Ideal bucket for bulk products (cereals, woodchip, mineral feed etc.).
- Shape designed for quick loading and unloading operation.

Technical characteristics

- Wide range of bucket capacities from 900 L to 3000 L.
- Light material bucket suitable for handling materials with a density ≤ 1000kg/m3.
- Reinforced structure (base, blade and sides).
- "DA" = tip angle increased of 10°.
- Optional: 500 HB reversible wear plate.
- Note: road circulation kit mandatory in Italy. Contact your dealer.

[The 3D picture at the top of this page is the reference CBA 2500/2450 - 570554].

MANITOU GROUP | ATTACHMENTS

Technical characteristics		CBA 900 / 1500	CBA 1500 / 2050	CBA 1500 / 2050 DA	CBA 1500 / 2450	CBA 1700L / 2100	CBA 2000 / 2450	CBA 2000L / 2250	CBA 2500L / 2450	CBA 3000 / 2500
Distance to center of gravity (mm)		523	572	509	542	440	485	664	537	583
Capacities										
Capacity (kg)		886	1500	1500	1529	1703	2010	1970	2526	3023
Heaped capacity (l)		886	1500	1500	1529	1703	2010	1970	2526	3023
Struck capacity (l)		672	1101	1101	1101	1271	1484	1456	1916	2342
Weight										
Overall weight (kg)		367	490	482	500	512	557	585	675	753
Weight and dimensions										
Overall height (mm)	h17	1029	1119	1119	997	1150	1150	1104	1250	1314
Overall length (mm)	l1	1154	1147	1147	1170	1190	1204	1422	1497	1733
Width (mm)		1500	2050	2050	2450	2100	2450	2250	2450	2500
Working Parameters										
Machine Equipment		X	X	X	X	X	X	X	X	X

Machines compatibility	CBA 900 / 1500	CBA 1500 / 2050	CBA 1500 / 2050 DA	CBA 1500 / 2450	CBA 1700L / 2100	CBA 2000 / 2450	CBA 2000L / 2250	CBA 2500L / 2450	CBA 3000 / 2500
Reference number	570543	570546	653035	570547	570549	570551	790540	570553	570555
Reference number with bolted wearplate (WP)	-	-	52000489	570548	52610570	570552	790541	570554	500701
Skid Steer Carriage reference	52658300	-	-	-	-	-	-	-	-
ALT950	-	-	-	X	-	X	X	-	-
MLA-T 533-145 V+ - ST5	-	-	-	X	-	X	X	-	-
MLT 420-60 H	X	-	-	-	-	-	-	-	-
MLT 625-75 H	-	X	X	-	-	-	-	-	-
MLT 630-115	-	-	-	X	X	X	X	-	-
MLT 630-115 V	-	-	-	X	X	X	X	-	-
MLT 630-115 V CP	-	-	-	X	X	X	X	-	-
MLT 635-130 PS+	-	-	-	X	-	X	-	X	-
MLT 635-140 V+	-	-	-	X	-	X	-	X	-
MLT 730-115 V	-	-	-	X	X	X	X	-	-
MLT 730-115 V CP	-	-	-	X	X	X	X	-	-
MLT 733-115 LSU	-	-	-	X	X	X	X	X	-
MLT 737-130 PS+	-	-	-	X	X	X	X	X	X
MLT 741-130 PS+	-	-	-	X	X	X	X	X	X
MLT 741-140 V+	-	-	-	X	X	X	X	X	X
MLT 841-145 PS+	-	-	-	-	-	X	-	X	X
MLT 850-145 V+	-	-	-	-	-	-	-	X	X
MLT 940-140 V+	-	-	-	-	-	X	-	X	X
MLT 1041-145 PS+L	-	-	-	-	-	X	-	X	X
MLT-X 625-75 H	-	X	X	-	-	-	-	-	-
MLT-X 732	-	-	-	X	-	X	-	X	-
MLT-X 735 T LSU	-	-	-	X	-	X	-	X	-
MLT-X 735 T LSU (70 KW)	-	-	-	X	-	-	-	X	-
MLT-X 737-130 PS+	-	-	-	X	X	X	X	X	-
MLT-X 741 T LSU	-	-	-	-	-	X	-	X	X
MLT-X 841 - 145 PS+	-	-	-	-	-	X	-	X	X
MLT-X 850-145 V+	-	-	-	-	-	-	-	X	X
MLT-X 1035 LT LSU	-	-	-	X	-	-	-	X	-
MLT-X 1041-145 PS+L	-	-	-	-	-	X	-	X	X
MLT 630-105 ST4 OLD	-	-	-	X	X	X	X	-	-
MLT 630-105 V CP ST4 OLD	-	-	-	X	X	X	X	-	-
MLT 630-105 V ST4 OLD	-	-	-	X	X	X	X	-	-
MLT 635-130 PS+ ST4 OLD	-	-	-	X	-	X	-	X	-
MLT 635-140 V+ ST4 OLD	-	-	-	X	-	X	X	X	-
MLT 730-115 V CP ST4 OLD	-	-	-	X	X	X	X	-	-
MLT 730-115 V ST4 OLD	-	-	-	X	X	X	X	-	-
MLT 733-115 OLD	-	-	-	X	X	X	X	X	-
MLT 733-115 LSU ST4 OLD	-	-	-	X	X	X	X	X	-
MLT 733-115 ST4 OLD	-	-	-	X	X	X	X	X	-
MLT 737-130 PS+ ST4 OLD	-	-	-	X	X	X	X	X	X
MLT 741-140 V+ ST4 OLD	-	-	-	X	X	X	X	X	X
MLT 840-145 PS+ OLD	-	-	-	-	-	X	-	X	X
MLT 845-100 H OLD	-	-	-	X	-	X	-	X	X
MLT 845-120 OLD	-	-	-	X	-	X	-	X	X
MLT 940-140 V+ ST4 OLD	-	-	-	-	-	X	-	X	X
MLT 1040-145 PS+ L OLD	-	-	-	-	-	X	-	X	X
MLT-X 737-130 PS+ OLD	-	-	-	X	X	X	X	X	X
MLT-X 741-140 V+ S1 OLD	-	-	-	X	X	X	X	X	X
MLT-X 840-140 PS+ OLD	-	-	-	-	-	X	-	X	X
MLT-X 845-120 OLD	-	-	-	X	-	X	-	X	X
MLT-X 845-120 H OLD	-	-	-	X	-	X	-	X	X
MLT-X 1040-140 PS+ L OLD	-	-	-	-	-	X	-	X	X

TABLE SYMBOL					
X	No predisposition required		Hydraulic line		Return piping to hydraulic oil tank
	Electric predisposition		Platform predisposition		Tyre handler, cylinder handler predisposition

Agricultural Bucket - Dimensional drawing

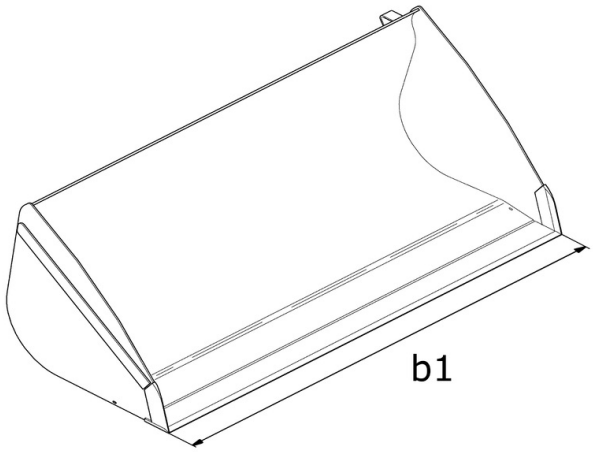

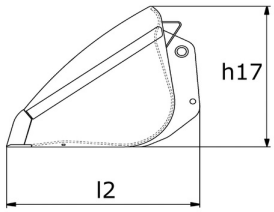

Head Office
B.P. 249 - 430 rue de l'Aubinière
44150 Ancenis Cedex - France
Tel: +33 (0)2 40 09 10 11 - Fax: +33 (0)2 40 09 10 97
www.manitou.com

This publication provides a description of the configuration versions and options for Manitou products, which may differ for equipment. The equipment presented in this brochure may be part of a series, as an option, or it may not be available, depending on the versions. Manitou reserves the right, at any time and without notice, to amend the specifications described and represented. The specifications provided do not bind the manufacturer. For more details, please contact your Manitou agent. This is not a contractually binding document. The presentation of the products is not contractually binding. List of specifications non-exhaustive. The logos as well as the visual identity of the company are owned by Manitou and cannot be used without authorisation. All rights reserved. The photos and diagrams contained in this brochure are only provided for consultation and information purposes.
MANITOU BF SA - Limited company with board of directors - Share capital: 39,668,399 euros - 857 802 508 RCS Nantes