Technical sheet :

AGRICULTURAL MULTIFUNCTION GRAB BUCKET - WE

Customer benefits

- Robust and versatile bucket suitable for diary use and different agricultural applications.
- Complete opening>90° and powerful jaw allows working flush with walls.
- Perfect for handling wet manure, silage….
- Must-have tool for livestock farm.

Technical characteristics

- Welded teeth -WE.
- Handling materials with a density ≤ 1000kg/m3.
- Dismountable sides, spill guard and 500HB bolt-on cutting edge standard.
- Reinforced construction (base, blade and grab).
- Nitritized cylinders, all pins with "construction type" mounting.

[The 3D picture at the top of this page is the reference BG 1850 / 1050 DA WE - 52647326].

MANITOU GROUP | ATTACHMENTS

Technical characteristics		BG 1500 / 600 WE	BG 1500 / 850 WE	BG 1850 / 1050 DA WE	BG 2100 / 1200 WE	BG 2300 / 1350 WE	BG 2450 / 1400 WE	BG 2450 / 1700 WE
Distance to center of gravity (mm)		357	440	450	412	413	418	1021
Capacities								
Capacity (kg)		550	850	1059	1200	1335	1426	1695
Heaped capacity (l)		550	850	1059	1200	1335	1426	1695
Struck capacity (l)		340	521	650	740	813	868	1150
Weight								
Overall weight (kg)		382	580	696	745	785	813	895
Weight and dimensions								
Overall length (mm)	l1	1142	1263	1288	1280	1280	1280	1377
Width (mm)		1500	1500	1850	2100	2300	2450	2450
Closed grab height (mm)	h33	798	1039	1033	1032	1031	1033	1124
Opened grab height (mm)	h34	1450	1777	1776	1776	1776	1776	1979
Working Parameters								
Machine Equipment								
Teeth		6	6	7	8	8	8	9
Fork spread minimum (mm)	b5	278	280	285	280	309	330	289
Fork spread maximum (mm)	b5	280	280	285	280	309	330	289
Other Data for Attachments								
Bolted wearplate (LDR)		Standard	Standard	Standard	Standard	Standard	Standard	Standard
Wear plate hardness		500	500	500	500	500	500	500

Machines compatibility	BG 1500 / 600 WE	BG 1500 / 850 WE	BG 1850 / 1050 DA WE	BG 2100 / 1200 WE	BG 2300 / 1350 WE	BG 2450 / 1400 WE	BG 2450 / 1700 WE
Reference number	-	52651959	52647326	52647328	52647330	52647332	52549720
Skid Steer Carriage reference	-	52651960	-	-	-	-	-
All-Tach®	52736705	-	-	-	-	-	-
4 point Carriage	52742062	-	-	-	-	-	-
Euro Carriage	52742063	-	-	-	-	-	-
AL530	X	-	-	-	-	-	-
ALT950	-	-	-	-	X	X	X
GCT 3-14	X	-	-	-	-	-	-
GCT 3-14	X	-	-	-	-	-	-
GCT 3-14 +	X	-	-	-	-	-	-
GCT 3-14+	X	-	-	-	-	-	-
MLA 5-50 H	X	-	-	-	-	-	-
MLA-T 533-145 V+ - ST5	-	-	-	-	X	X	X
MLT 420-60 H	-	X	-	-	-	-	-
MLT 625-75 H	-	-	X	-	-	-	-
MLT 630-115	-	-	-	X	X	X	-
MLT 630-115 V	-	-	-	X	X	X	-
MLT 630-115 V CP	-	-	-	X	X	X	-
MLT 635-130 PS+	-	-	-	-	-	X	X
MLT 635-140 V+	-	-	-	-	-	X	X
MLT 730-115 V	-	-	-	X	X	X	-
MLT 730-115 V CP	-	-	-	X	X	X	-
MLT 733-115 LSU	-	-	-	-	-	X	X
MLT 737-130 PS+	-	-	-	-	-	X	X
MLT 841-145 PS+	-	-	-	-	-	X	X
MLT 850-145 V+	-	-	-	-	-	-	X
MLT 940-140 V+	-	-	-	-	-	X	X
MLT 1041-145 PS+L	-	-	-	-	-	X	X
MLT-X 625-75 H	-	-	X	-	-	-	-
MLT-X 732	-	-	-	-	-	X	-
MLT-X 735 T LSU	-	-	-	-	-	X	X
MLT-X 737-130 PS+	-	-	-	-	-	X	X
MLT-X 741 T LSU	-	-	-	-	-	X	X
MLT-X 841 - 145 PS+	-	-	-	-	-	X	X
MLT-X 850-145 V+	-	-	-	-	-	-	X
MLT-X 1041-145 PS+L	-	-	-	-	-	X	X
ULM 412 H	X	-	-	-	-	-	-
ULM 412 H	X	-	-	-	-	-	-
ULM 415 H	X	-	-	-	-	-	-
ULM 415 H	X	-	-	-	-	-	-
MLT 630-105 ST4 OLD	-	-	-	X	X	X	-
MLT 630-105 V CP ST4 OLD	-	-	-	X	X	X	-
MLT 630-105 V ST4 OLD	-	-	-	X	X	X	-
MLT 635-130 PS+ ST4 OLD	-	-	-	-	-	X	X
MLT 635-140 V+ ST4 OLD	-	-	-	-	-	X	X
MLT 730-115 V CP ST4 OLD	-	-	-	X	X	X	-
MLT 730-115 V ST4 OLD	-	-	-	X	X	X	-
MLT 733-115 OLD	-	-	-	-	-	X	X
MLT 733-115 LSU ST4 OLD	-	-	-	-	-	X	X
MLT 733-115 ST4 OLD	-	-	-	-	-	X	X
MLT 737-130 PS+ ST4 OLD	-	-	-	-	-	X	X
MLT 741-140 V+ ST4 OLD	-	-	-	-	-	X	X
MLT 840-145 PS+ OLD	-	-	-	-	-	X	X
MLT 845-100 H OLD	-	-	-	-	-	X	X
MLT 845-120 OLD	-	-	-	-	-	X	X
MLT 940-140 V+ ST4 OLD	-	-	-	-	-	X	X
MLT 1040-145 PS+ L OLD	-	-	-	-	-	X	X

Machines compatibility	BG 1500 / 600 WE	BG 1500 / 850 WE	BG 1850 / 1050 DA WE	BG 2100 / 1200 WE	BG 2300 / 1350 WE	BG 2450 / 1400 WE	BG 2450 / 1700 WE
MLT-X 737-130 PS+ OLD	-	-	-	-	-	X	X
MLT-X 741-140 V+ S1 OLD	-	-	-	-	-	X	X
MLT-X 840-140 PS+ OLD	-	-	-	-	-	X	X
MLT-X 845-120 OLD	-	-	-	-	-	X	X
MLT-X 845-120 H OLD	-	-	-	-	-	X	X
MLT-X 1040-140 PS+ L OLD	-	-	-	-	-	X	X

TABLE SYMBOL					
	No predisposition required		Hydraulic line		Return piping to hydraulic oil tank
	Electric predisposition		Platform predisposition		Tyre handler, cylinder handler predisposition

Agricultural Multifunction Grab Bucket - WE - Dimensional drawing

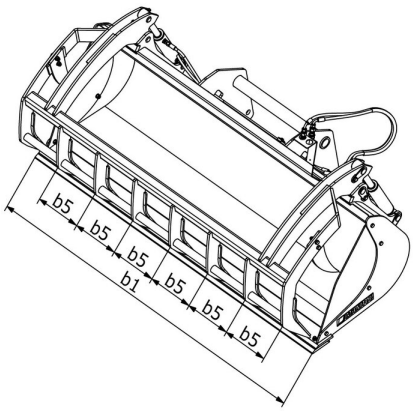

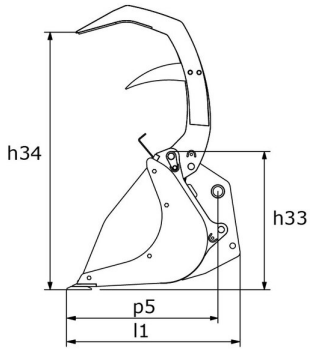

MANITOU
HANDLING YOUR WORLD

Head Office
B.P. 249 - 430 rue de l'Aubinière
44150 Ancenis Cedex - France
Tel: +33 (0)2 40 09 10 11 - Fax: +33 (0)2 40 09 10 97
www.manitou.com

This publication provides a description of the configuration versions and options for Manitou products, which may differ for equipment. The equipment presented in this brochure may be part of a series, as an option, or it may not be available, depending on the versions. Manitou reserves the right, at any time and without notice, to amend the specifications described and represented. The specifications provided do not bind the manufacturer. For more details, please contact your Manitou agent. This is not a contractually binding document. The presentation of the products is not contractually binding. List of specifications non-exhaustive. The logos as well as the visual identity of the company are owned by Manitou and cannot be used without authorisation. All rights reserved. The photos and diagrams contained in this brochure are only provided for consultation and information purposes.
MANITOU BF SA - Limited company with board of directors - Share capital: 39,668,399 euros - 857 802 508 RCS Nantes