Technical sheet :

WRAPPED BALE CLAMP

Customer benefits

- Easy to use and competitive attachment.
- Powerful double effect cylinder allows the manipulation of very heavy bales.
- Rounded and articulated clamp designed to fit the shape of every bale.
- Smooth structure that avoids any perforation of plastic film.

Technical characteristics

- Self-lubricated anti-wear ring that improves the longevity of the attachment.
- Excellent lifting capacity from 800 kg / 1764 lb up to 1000 kg / 2205 lb.
- Welded monobloc chassis.
- CLBW 800 : handles wrapped bale with Ø from 0,85 m / 3 ft to 1,45 m / 5 ft.
- CLBW 1500 : handles wrapped bale with Ø from 1 m / 3 ft to 1,7 m / 6 ft.

MANITOU GROUP | ATTACHMENTS

Capacities		CLBW 800	CLBW 1500
Capacity (kg)		800	1500
Weight			
Overall weight (kg)		227	251
Weight and dimensions			
Overall height (mm)	h17	810	810
Overall length (mm)	l1	1386	1490
Width (mm)		1587	1587
Working Parameters			
Required machine equipment			
Minimum opening (mm)		249	510
Maximum opening (mm)		1503	1846
1 Wrapped bale max diameter (mm)		1450	1700
1 Wrapped bale min diameter (mm)		850	1000

Machines compatibility	CLBW 800	CLBW 1500
Reference number	52000813	52001012
ALT950	-	X
MLA-T 533-145 V+ - ST5	-	X
MLT 420-60 H	X	X
MLT 625-75 H	X	X
MLT 625 e	X	X
MLT 630-115 (S2)	X	X
MLT 630-115 V (S2)	X	X
MLT 630-115 V CP (S2)	X	X
MLT 635-130 PS+ (S2)	X	X
MLT 635-140 V+ (S2)	X	X
MLT 730-115 V (S2)	X	X
MLT 730-115 V CP (S2)	X	X
MLT 733-115 (S2)	X	X
MLT 738-130 PS+ (S1)	X	X
MLT 742-130 PS+ (S1)	X	X
MLT 742-140 V+ (S1)	X	X
MLT 841-145 PS+	-	X
MLT 850-145 V+	-	X
MLT 937-115 (S1)	X	X
MLT 940-140 V+ (S2)	X	X
MLT 961-160 V+ L	-	X
MLT 1041-145 PS+L	X	X
MLT-X 625-75 H	X	X
MLT-X 732	X	X
MLT-X 735 T LSU	X	X
MLT-X 738-130 PS+ (S1)	X	X
MLT-X 741 T LSU	-	X
MLT-X 841 - 145 PS+	-	X
MLT-X 850-145 V+	-	X
MLT-X 961-160 V+ L	-	X
MLT-X 1041-145 PS+L	X	X
MLT 630-105 ST4 OLD	X	X
MLT 630-105 V CP ST4 OLD	X	X
MLT 630-105 V ST4 OLD	X	X
MLT 630-115 (S1) OLD	X	X
MLT 630-115 V (S1) OLD	X	X
MLT 630-115 V CP (S1) OLD	X	X
MLT 635-130 PS+ (S1) OLD	X	X
MLT 635-140 V+ (S1) OLD	X	X
MLT 635-140 V+ ST4 OLD	X	X
MLT 730-115 V (S1) OLD	X	X
MLT 730-115 V CP (S1) OLD	X	X
MLT 730-115 V CP ST4 OLD	X	X
MLT 733-115 OLD	X	X
MLT 733-115 LSU (S1) OLD	X	X
MLT 733-115 LSU ST4 OLD	X	X
MLT 733-115 ST4 OLD	X	X
MLT 737-130 PS+ (S1) OLD	X	X
MLT 737-130 PS+ ST4 OLD	X	X
MLT 741-130 PS+ (S1) OLD	X	X
MLT 741-140 V+ (S1) OLD	X	X
MLT 741-140 V+ ST4 OLD	X	X
MLT 840-145 PS+ OLD	-	X
MLT 845-100 H OLD	-	X
MLT 845-120 OLD	-	X
MLT 940-140 V+ (S1) OLD	X	X
MLT 940-140 V+ ST4 OLD	X	X
MLT 1040-145 PS+ L OLD	-	X
MLT-X 737-130 PS+ OLD	X	X
MLT-X 737-130 PS+ (S2) OLD	X	X
MLT-X 741-140 V+ S1 OLD	X	X
MLT-X 840-140 PS+ OLD	-	X
MLT-X 845-120 OLD	-	X

Machines compatibility	CLBW 800	CLBW 1500
MLT-X 845-120 H OLD	-	X
MLT-X 961-145 V+ L OLD	-	X
MLT-X 1035 LT LSU OLD	-	X
MLT-X 1040-140 PS+ L OLD	-	X

TABLE SYMBOL					
	No predisposition required		Hydraulic line		Return piping to hydraulic oil tank
	Electric predisposition		Platform predisposition		Tyre handler, cylinder handler predisposition

Wrapped Bale Clamp - Dimensional drawing

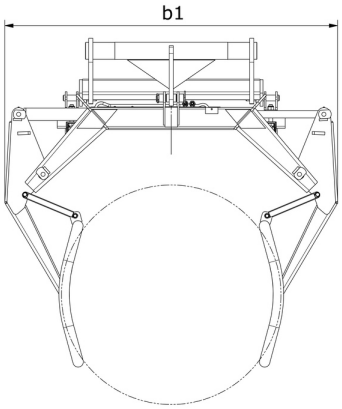

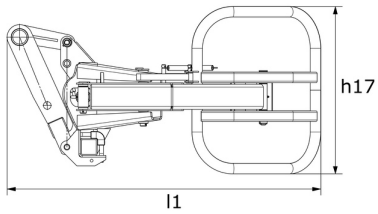

MANITOU
HANDLING YOUR WORLD

Head Office
B.P. 249 - 430 rue de l'Aubinière
44150 Ancenis Cedex - France
Tel: +33 (0)2 40 09 10 11 - Fax: +33 (0)2 40 09 10 97
www.manitou.com

This publication provides a description of the configuration versions and options for Manitou products, which may differ for equipment. The equipment presented in this brochure may be part of a series, as an option, or it may not be available, depending on the versions. Manitou reserves the right, at any time and without notice, to amend the specifications described and represented. The specifications provided do not bind the manufacturer. For more details, please contact your Manitou agent. This is not a contractually binding document. The presentation of the products is not contractually binding. List of specifications non-exhaustive. The logos as well as the visual identity of the company are owned by Manitou and cannot be used without authorisation. All rights reserved. The photos and diagrams contained in this brochure are only provided for consultation and information purposes.
MANITOU BF SA - Limited company with board of directors - Share capital: 39,668,399 euros - 857 802 508 RCS Nantes