Technical sheet :

HIGH CAPACITY SILAGE & MANURE GRAB

Customer benefits

- Massive and efficient attachment.
- Excellent visibility thanks to innovative design.
- The best solution for manure handling.
- Improved design allows working flush with walls.
- Versatile attachment that enables occasional square bale handling.

Technical characteristics

- Large capacity 2000 L.
- Grapple rotation stops ensure long life for hydraulic cylinders.
- Bolt-on teeth and tines for easy maintenance.
- High quality wear resistant and high yield steels used extensively.
- Teeth: Ø 45 mm, 939 mm.
- Tines: Ø 45 mm, 1100 mm.
- For silage and light straw manure. Max 700kg/m3.

[The 3D picture at the top of this page is the reference FMG 2450 / 2000 - 790534].

MANITOU GROUP | ATTACHMENTS

Capacities		FMG 2100 / 1800 ONLY UK IRL	FMG 2450 / 2000
Capacity (kg)		1260	1400
Heaped capacity (l)		1800	2000
Weight			
Overall weight (kg)		510	686
Weight and dimensions			
Overall length (mm)	l1	1352	1381
Forks length (mm)	l	990	990
Width (mm)		2100	2435
Closed grab height (mm)	h33	1223	1201
Working Parameters			
Machine Equipment			
Teeth / Fingers		4 / 10	5 / 12
Fork spread minimum (mm)	b5	221	210
Fork spread maximum (mm)	b5	637	554

Machines compatibility	FMG 2100 / 1800 ONLY UK IRL	FMG 2450 / 2000
Reference number	52000082	790534
MLT 630-115	X	-
MLT 630-115 V	X	-
MLT 630-115 V CP	X	-
MLT 635-130 PS+	-	X
MLT 635-140 V+	-	X
MLT 733-115 LSU	-	X
MLT 737-130 PS+	-	X
MLT 741-130 PS+	-	X
MLT 741-140 V+	-	X
MLT 841-145 PS+	-	X
MLT 850-145 V+	-	X
MLT 940-140 V+	-	X
MLT 961-160 V+ L	-	X
MLT 1041-145 PS+L	-	X
MLT-X 732	-	X
MLT-X 735 T LSU	-	X
MLT-X 737-130 PS+	-	X
MLT-X 741 T LSU	-	X
MLT-X 841 - 145 PS+	-	X
MLT-X 850-145 V+	-	X
MLT-X 961-160 V+ L	-	X
MLT-X 1041-145 PS+L	-	X
MLT 630-105 ST4 OLD	X	-
MLT 630-105 V CP ST4 OLD	X	-
MLT 630-105 V ST4 OLD	X	-
MLT 635-130 PS+ ST4 OLD	-	X
MLT 635-140 V+ ST4 OLD	-	X
MLT 733-115 OLD	-	X
MLT 733-115 LSU ST4 OLD	-	X
MLT 733-115 ST4 OLD	-	X
MLT 737-130 PS+ ST4 OLD	-	X
MLT 741-140 V+ ST4 OLD	-	X
MLT 840-145 PS+ OLD	-	X
MLT 940-140 V+ ST4 OLD	-	X
MLT 961-145 V+ L OLD	-	X
MLT 1040-145 PS+ L OLD	-	X
MLT-X 737-130 PS+ OLD	-	X
MLT-X 741-140 V+ S1 OLD	-	X
MLT-X 840-140 PS+ OLD	-	X
MLT-X 961-145 V+ L OLD	-	X
MLT-X 1040-140 PS+ L OLD	-	X

TABLE SYMBOL					
	No predisposition required		Hydraulic line		Return piping to hydraulic oil tank
	Electric predisposition		Platform predisposition		Tyre handler, cylinder handler predisposition

High Capacity Silage & Manure Grab - Dimensional drawing

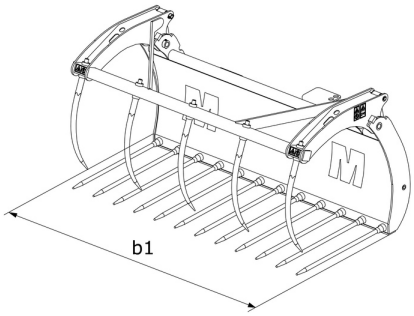

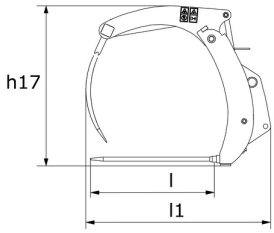

Head Office
B.P. 249 - 430 rue de l'Aubinière
44150 Ancenis Cedex - France
Tel: +33 (0)2 40 09 10 11 - Fax: +33 (0)2 40 09 10 97
www.manitou.com

This publication provides a description of the configuration versions and options for Manitou products, which may differ for equipment. The equipment presented in this brochure may be part of a series, as an option, or it may not be available, depending on the versions. Manitou reserves the right, at any time and without notice, to amend the specifications described and represented. The specifications provided do not bind the manufacturer. For more details, please contact your Manitou agent. This is not a contractually binding document. The presentation of the products is not contractually binding. List of specifications non-exhaustive. The logos as well as the visual identity of the company are owned by Manitou and cannot be used without authorisation. All rights reserved. The photos and diagrams contained in this brochure are only provided for consultation and information purposes.
MANITOU BF SA - Limited company with board of directors - Share capital: 39,668,399 euros - 857 802 508 RCS Nantes