Technical sheet :

ME 315 C FOB

MANITOU
HANDLING YOUR WORLD

	Technical characteristics		Metric
1.1	Manufacturer		Manitou
1.2	Model Name		ME 315 C FOB
1.3	Power source		Electrical
1.4	Operator type		Seated
1.5	Max. capacity	Q	1500 kg
1.6	Load center of gravity	c	500 mm
1.8	Load distance, centre of drive axle to fork	x	365 mm
1.9	Wheelbase	y	1220 mm
	Weight		
2.1	Service weight		3000 kg
2.2	Weight on front axle (laden) / rear axle (laden)		3930 kg / 570 kg
2.3	Weight on front axle (Unladen) / rear axle (Unladen)		1370 kg / 1630 kg
	Wheels		
3.1	Tires type		Super Elastic
3.2	Dimensions of front wheels		18x7-8
3.3	Dimensions of rear wheels		200/50-10
3.5	Number of front wheels / rear wheels		2 / 1
3.5.2	Number of drive wheels		1
3.6	Front wheel gauge	b10	835 mm
	Dimensions		
4.7	Height of overhead guard (cabin)	h6	2105 mm
4.8	Seat height/stand height	h7	1020 mm
4.12	Height of towing bar (coupling height)	h10	500 mm
4.19	Overall length	l1	3015 mm
4.20	Length to face of forks	l2	1865 mm
4.21	Overall width	b1	990 mm
4.22	Forks section / width / length	s / e / l	35 mm x 100 mm x 1150 mm
4.23	Fork carriage ISO 2328 (class/form) A/B		2A
4.24	Fork carriage width	b3	1000 mm
4.31	Ground clearance below mast	m1	100 mm
4.32	Ground clearance at centre of wheelbase	m2	100 mm
4.33	Aisle Width for pallets 1000 x 1200 crossways	Ast	3201 mm
4.34	Aisle width for 800 x 1200 pallet lengthways	Ast	3325 mm
4.35	Turning radius	Wa	1510 mm
	Performances		
5.1	Travel speed (laden / unladen)		9.50 km/h-10.50 km/h
5.2	Lifting speed (laden / unladen)		0.22 m/s-0.34 m/s
5.3	Lowering speed (laden / unladen)		0.58 m/s-0.48 m/s
5.5	Drawbar pull (Laden / Unladen)		500 daN / 530 daN
5.7	Gradeability (laden / unladen)		7 % / 9 %
5.10	Service brake		Hydraulic
	Engine		
6.1	Drive motor rating S2 60 min		4 kW
6.3	Battery according to DIN 43531/35/36 A, B, C		DIN43535 A
6.4	Battery voltage / capacity		24 V / 840 Ah
7.2	I.C. Engine power rating		8.60 kW
6.6	Energy consumption according to VDI cycle (kWh/h)		3.50 kWh/h
	Miscellaneous		
8.1	Type of drive control		Electric
8.2	Working hydraulic pressure for attachments		145 bar
8.3	Oil flow rate for attachments		16 l/min
8.4	Measured/guaranteed mean noise level at the ear of the operator		< 70 dB
8.4	Sound level at the driver's ear according to DIN 12 053		40 dB

ME 315 C FOB - Dimensional drawing

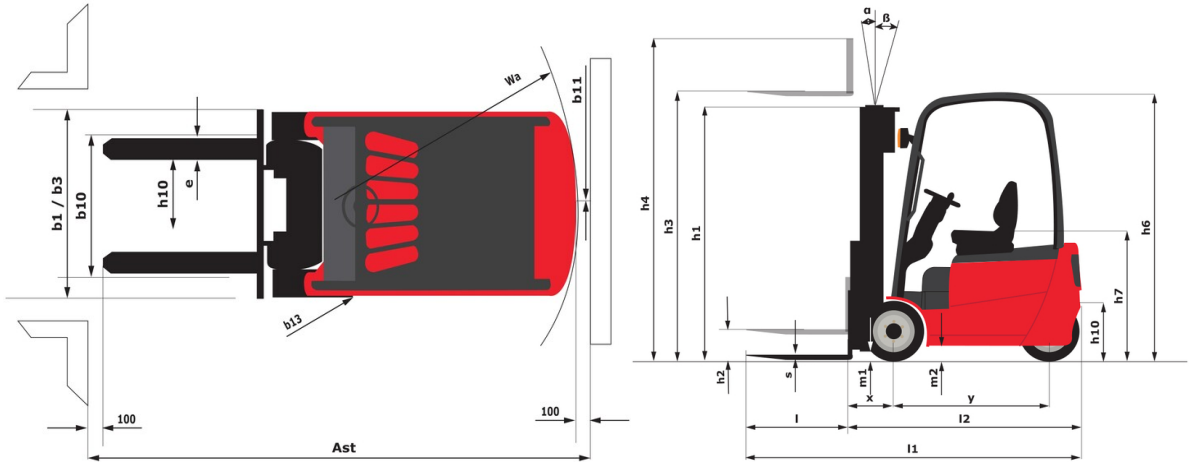

Characteristics of masts and residual capacities

Full Visibility Duplex (FVD)		FVD 27	FVD 30	FVD 33	FVD 36	FVD 40	FVD 43	FVD 45
α - Mast/fork carriage tilt, forward	°	6	6	6	6	3.50	3.50	3.50
β - Mast/fork carriage tilt, backward	°	5	5	5	5	5	5	5
h1 - Mast lowered height	mm	1830	1980	2130	2330	2580	2730	2830
h2 - Mast free lift	mm	155	155	155	155	155	155	155
h3 - Mast lifting height	mm	2700	3000	3300	3600	4000	4300	4500
h4 - Mast extended height	mm	3233	3533	3833	4133	4533	4833	5033
Residual capacity at max height	kg	1500	1500	1500	1500	1500	1500	1450
Residual capacity with integrated side shift at max heigth	kg	1500	1500	1500	1500	1500	1500	1450
Residual capacity with hooked-on side shift at max heigth	kg	1500	1500	1500	1500	1450	1400	1350
Height at max capacity	mm	2700	3000	3300	3600	4000	4300	4000
Height at max capacity with integrated sideshift	mm	2700	3000	3300	3600	4000	4300	4000

Free Lift Duplex (FLD)		FLD 27	FLD 30	FLD 33	FLD 36	FLD 40
α - Mast/fork carriage tilt, forward	°	6	6	6	6	3.50
β - Mast/fork carriage tilt, backward	°	5	5	5	6	5
h1 - Mast lowered height	mm	1845	1995	2145	2295	2545
h2 - Mast free lift	mm	1286	1436	1586	1736	1986
h3 - Mast lifting height	mm	2700	3000	3300	3600	4000
h4 - Mast extended height	mm	3259	3559	3859	4159	4559
Residual capacity at max height	kg	1500	1500	1500	1500	1500
Residual capacity with integrated side shift at max heigth	kg	1500	1500	1500	1500	1500
Residual capacity with hooked-on side shift at max heigth	kg	1500	1500	1500	1500	1450
Height at max capacity	mm	2700	3000	3300	3600	4000
Height at max capacity with integrated sideshift	mm	2700	3000	3300	3600	4000

Free Lift Triplex (FLT)		FLT 43	FLT 45	FLT 48	FLT 50	FLT 55	FLT 60	FLT 65
α - Mast/fork carriage tilt, forward	°	3.50	3.50	3.50	3.50	3.50	3.50	3.50
β - Mast/fork carriage tilt, backward	°	5	5	5	5	5	5	5
h1 - Mast lowered height	mm	2045	2095	2245	2345	2545	2795	2995
h2 - Mast free lift	mm	1471	1521	1671	1771	1971	2200	2400
h3 - Mast lifting height	mm	4300	4500	4800	5000	5500	6000	6500
h4 - Mast extended height	mm	4884	5084	5384	5584	6084	6605	7105
Residual capacity at max height	kg	1400	1350	1300	1250	1200	1000	600
Residual capacity with integrated side shift at max heigth	kg	1400	1350	1300	1250	1200	1000	600
Residual capacity with hooked-on side shift at max heigth	kg	1300	1250	1200	1150	1100	900	500
Height at max capacity	mm	2500	2500	2500	2500	2500	2500	2500

Head Office
B.P. 249 - 430 rue de l'Aubinière
44150 Ancenis Cedex - France
Tel: +33 (0)2 40 09 10 11 - Fax: +33 (0)2 40 09 10 97
www.manitou.com

This publication provides a description of the configuration versions and options for Manitou products, which may differ for equipment. The equipment presented in this brochure may be part of a series, as an option, or it may not be available, depending on the versions. Manitou reserves the right, at any time and without notice, to amend the specifications described and represented. The specifications provided do not bind the manufacturer. For more details, please contact your Manitou agent. This is not a contractually binding document. The presentation of the products is not contractually binding. List of specifications non-exhaustive. The logos as well as the visual identity of the company are owned by Manitou and cannot be used without authorisation. All rights reserved. The photos and diagrams contained in this brochure are only provided for consultation and information purposes.
MANITOU BF SA - Limited company with board of directors - Share capital: 39,668,399 euros - 857 802 508 RCS Nantes