Technical sheet :

ME 418 FOB

MANITOU
HANDLING YOUR WORLD

	Technical characteristics		Metric
1.1	Manufacturer		Manitou
1.2	Model Name		ME 418 FOB
1.3	Power source		Electrical
1.4	Operator type		Seated
1.5	Max. capacity	Q	1800 kg
1.6	Load center of gravity	c	500 mm
1.8	Load distance, centre of drive axle to fork	x	411 mm
1.9	Wheelbase	y	1380 mm
	Weight		
2.1	Service weight		3070 kg
2.2	Weight on front axle (laden) / rear axle (laden)		4350 kg / 520 kg
2.3	Weight on front axle (Unladen) / rear axle (Unladen)		1400 kg / 1670 kg
	Wheels		
3.1	Tires type		Solid tires
3.2	Dimensions of front wheels		21 x 8-9
3.3	Dimensions of rear wheels		5.00-8
3.5	Number of front wheels / rear wheels		2 / 2
3.5.2	Number of drive wheels		2
3.6	Front wheel gauge	b10	938 mm
3.7	Rear wheel gauge	b11	898 mm
	Dimensions		
4.7	Height of overhead guard (cabin)	h6	2130 mm
4.8	Seat height/stand height	h7	1045 mm
4.12	Height of towing bar (coupling height)	h10	275 mm
4.19	Overall length	l1	3248 mm
4.20	Length to face of forks	l2	2098 mm
4.21	Overall width	b1	1138 mm
4.22	Forks section / width / length	s / e / l	100 mm x 1150 mm x 35 mm
4.23	Fork carriage ISO 2328 (class/form) A/B		2A
4.24	Fork carriage width	b3	1000 mm
4.31	Ground clearance below mast	m1	100 mm
4.32	Ground clearance at centre of wheelbase	m2	110 mm
4.33	Aisle Width for pallets 1000 x 1200 crossways	Ast	3511 mm
4.34	Aisle width for 800 x 1200 pallet lengthways	Ast	3711 mm
4.35	Turning radius	Wa	1900 mm
4.36	Internal turning radius (over tyres)	b13	680 mm
	Performances		
5.1	Travel speed (laden / unladen)		13.50 km/h-14 km/h
5.2	Lifting speed (laden / unladen)		0.29 m/s-0.44 m/s
5.3	Lowering speed (laden / unladen)		0.49 m/s-0.48 m/s
5.5	Drawbar pull (Laden / Unladen)		1200 daN / 1100 daN
5.7	Gradeability (laden / unladen)		12 % / 13 %
5.10	Service brake		Hydraulic
	Engine		
6.1	Drive motor rating S2 60 min		8 kW
6.2	Lift motor rating at S3 15%		8.60 kW
6.3	Battery according to DIN 43531/35/36 A, B, C		DIN43531 A
6.4	Battery voltage / capacity		48 V / 465 Ah
6.6	Energy consumption according to VDI cycle (kWh/h)		4.60 kWh/h
	Miscellaneous		
8.1	Type of drive control		Electronic
8.2	Working hydraulic pressure for attachments		175 bar
8.3	Oil flow rate for attachments		35 l/min
8.4	Measured/guaranteed mean noise level at the ear of the operator		< 71 dB
8.4	Sound level at the driver's ear according to DIN 12 053		71 dB

ME 418 FOB - Dimensional drawing

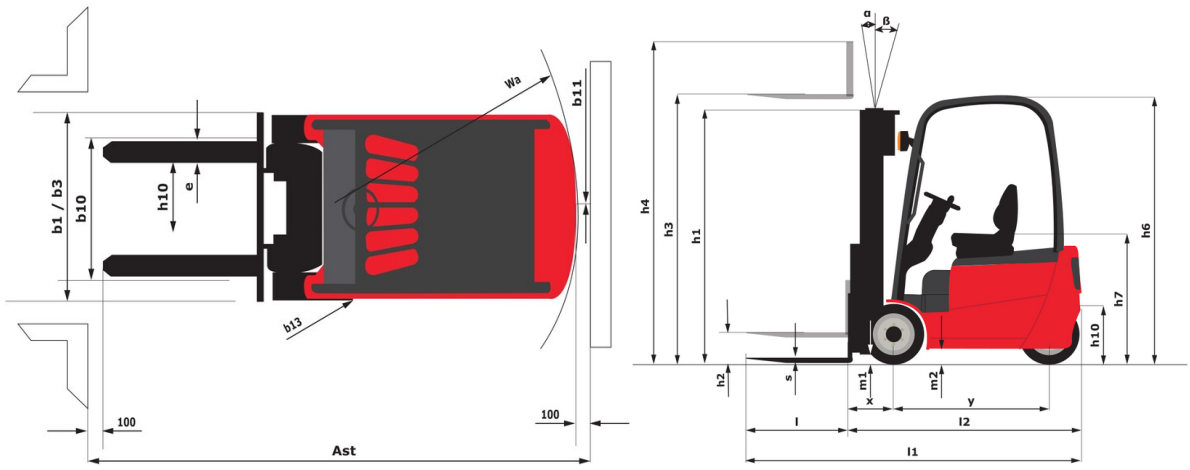

Characteristics of masts and residual capacities

Full Visibility Duplex (FVD)		FVD 27	FVD 30	FVD 33	FVD 36	FVD 40	FVD 43	FVD 45
α - Mast/fork carriage tilt, forward	°	5	5	5	5	5	5	5
β - Mast/fork carriage tilt, backward	°	6	10	10	10	10	6	6
h1 - Mast lowered height	mm	1825	1975	2125	2325	2575	2725	2825
h2 - Mast free lift	mm	145	145	145	145	145	145	145
h3 - Mast lifting height	mm	2700	3000	3300	3600	4000	4300	4500
h4 - Mast extended height	mm	3265	3565	3865	4165	4565	4865	5065
Residual capacity at max height	kg	1800	1800	1800	1800	1800	1700	1650
Residual capacity with integrated side shift at max heigth	kg	1800	1800	1800	1800	1750	1650	1600
Residual capacity with hooked-on side shift at max heigth	kg	1800	1800	1800	1700	1650	1550	1500
Height at max capacity	mm	2700	3000	3300	3600	4000	4300	2500
Height at max capacity with integrated sideshift	mm	2700	3000	3300	3600	4000		

Free Lift Duplex (FLD)		FLD 27	FLD 30	FLD 33	FLD 36	FLD 40
α - Mast/fork carriage tilt, forward	°	5	5	5	5	5
β - Mast/fork carriage tilt, backward	°	6	10	10	10	10
h1 - Mast lowered height	mm	1825	1975	2125	2275	2525
h2 - Mast free lift	mm	1240	1390	1540	1690	1940
h3 - Mast lifting height	mm	2700	3000	3300	3600	4000
h4 - Mast extended height	mm	3295	3595	3895	4195	4595
Residual capacity at max height	kg	1800	1800	1800	1800	1800
Residual capacity with integrated side shift at max heigth	kg	1800	1800	1800	1800	1750
Residual capacity with hooked-on side shift at max heigth	kg	1800	1800	1800	1700	1650
Height at max capacity	mm	2700	3000	3300	3600	4000
Height at max capacity with integrated sideshift	mm	2700	3000	3300	3600	4000

Free Lift Triplex (FLT)		FLT 40	FLT 43	FLT 45	FLT 48	FLT 50	FLT 55	FLT 60	FLT 65
α - Mast/fork carriage tilt, forward	°	5	5	5	5	5	3	3	3
β - Mast/fork carriage tilt, backward	°	6	6	6	6	6	6	6	6
h1 - Mast lowered height	mm	1975	2075	2085	2200	2250	2425	2650	2815
h2 - Mast free lift	mm	1250	1350	1500	1600	1665	1840	2000	2200
h3 - Mast lifting height	mm	4000	4300	4500	4800	5000	5500	6000	6500
h4 - Mast extended height	mm	4735	5035	5105	5410	5595	6095	6660	7125
Residual capacity at max height	kg	1700	1650	1650	1600	1550	1500	1300	1150
Residual capacity with integrated side shift at max heigth	kg	1650	1600	1600	1550	1500	1450	1250	1100
Residual capacity with hooked-on side shift at max heigth	kg	1550	1550	1500	1450	1400	1250	1150	1000
Height at max capacity	mm	2500	2500	2500	2500	2500	2500	2500	2500

Head Office
B.P. 249 - 430 rue de l'Aubinière
44150 Ancenis Cedex - France
Tel: +33 (0)2 40 09 10 11 - Fax: +33 (0)2 40 09 10 97
www.manitou.com

This publication provides a description of the configuration versions and options for Manitou products, which may differ for equipment. The equipment presented in this brochure may be part of a series, as an option, or it may not be available, depending on the versions. Manitou reserves the right, at any time and without notice, to amend the specifications described and represented. The specifications provided do not bind the manufacturer. For more details, please contact your Manitou agent. This is not a contractually binding document. The presentation of the products is not contractually binding. List of specifications non-exhaustive. The logos as well as the visual identity of the company are owned by Manitou and cannot be used without authorisation. All rights reserved. The photos and diagrams contained in this brochure are only provided for consultation and information purposes.
MANITOU BF SA - Limited company with board of directors - Share capital: 39,668,399 euros - 857 802 508 RCS Nantes