Technical sheet :

# ME 425C FOB

MANITOU
HANDLING YOUR WORLD

| | Technical characteristics | | Metric |
|---|---|---|---|
| 1.1 | Manufacturer | | Manitou |
| 1.2 | Model Name | | ME 425C FOB |
| 1.3 | Power source | | Electrical |
| 1.4 | Operator type | | Seated |
| 1.5 | Max. capacity | Q | 2500 kg |
| 1.6 | Load center of gravity | c | 500 mm |
| 1.8 | Load distance, centre of drive axle to fork | x | 448 mm |
| 1.9 | Wheelbase | y | 1485 mm |
| | **Weight** | | |
| 2.1 | Service weight | | 4300 kg |
| 2.2 | Weight on front axle (laden) / rear axle (laden) | | 6060 kg / 740 kg |
| 2.3 | Weight on front axle (Unladen) / rear axle (Unladen) | | 1960 kg / 2340 kg |
| | **Wheels** | | |
| 3.1 | Tires type | | Solid tires |
| 3.2 | Dimensions of front wheels | | 23 x 9-10 |
| 3.3 | Dimensions of rear wheels | | 18 x 7-8 |
| 3.5 | Number of front wheels / rear wheels | | 2 / 2 |
| 3.5.2 | Number of drive wheels | | 2 |
| 3.6 | Front wheel gauge | b10 | 1058 mm |
| 3.7 | Rear wheel gauge | b11 | 960 mm |
| | **Dimensions** | | |
| 4.7 | Height of overhead guard (cabin) | h6 | 2155 mm |
| 4.8 | Seat height/stand height | h7 | 1070 mm |
| 4.12 | Height of towing bar (coupling height) | h10 | 303 mm |
| 4.19 | Overall length | l1 | 3492 mm |
| 4.20 | Length to face of forks | l2 | 2342 mm |
| 4.21 | Overall width | b1 | 1265 mm |
| 4.22 | Forks section / width / length | s / e / l | 122 mm x 1150 mm x 40 mm |
| 4.23 | Fork carriage ISO 2328 (class/form) A/B | | 2A |
| 4.24 | Fork carriage width | b3 | 1038 mm |
| 4.31 | Ground clearance below mast | m1 | 112 mm |
| 4.32 | Ground clearance at centre of wheelbase | m2 | 120 mm |
| 4.33 | Aisle Width for pallets 1000 x 1200 crossways | Ast | 3738 mm |
| 4.34 | Aisle width for 800 x 1200 pallet lengthways | Ast | 3938 mm |
| 4.35 | Turning radius | Wa | 2090 mm |
| 4.36 | Internal turning radius (over tyres) | b13 | 730 mm |
| | **Performances** | | |
| 5.1 | Travel speed (laden / unladen) | | 14 km/h-14 km/h |
| 5.2 | Lifting speed (laden / unladen) | | 0.23 m/s-0.43 m/s |
| 5.3 | Lowering speed (laden / unladen) | | 0.41 m/s-0.22 m/s |
| 5.5 | Drawbar pull (Laden / Unladen) | | 1800 daN / 1700 daN |
| 5.7 | Gradeability (laden / unladen) | | 11 % / 12 % |
| 5.10 | Service brake | | Hydraulic |
| | **Engine** | | |
| 6.1 | Drive motor rating S2 60 min | | 11 kW |
| 6.2 | Lift motor rating at S3 15% | | 8.60 kW |
| 6.3 | Battery according to DIN 43531/35/36 A, B, C | | DIN43531 B |
| 6.4 | Battery voltage / capacity | | 48 V / 700 Ah |
| 6.6 | Energy consumption according to VDI cycle (kWh/h) | | 5.80 kWh/h |
| | **Miscellaneous** | | |
| 8.1 | Type of drive control | | Electronic |
| 8.2 | Working hydraulic pressure for attachments | | 175 bar |
| 8.3 | Oil flow rate for attachments | | 35 l/min |
| 8.4 | Measured/guaranteed mean noise level at the ear of the operator | | < 72 dB |
| 8.4 | Sound level at the driver's ear according to DIN 12 053 | | 72 dB |

## ME 425C FOB - Dimensional drawing

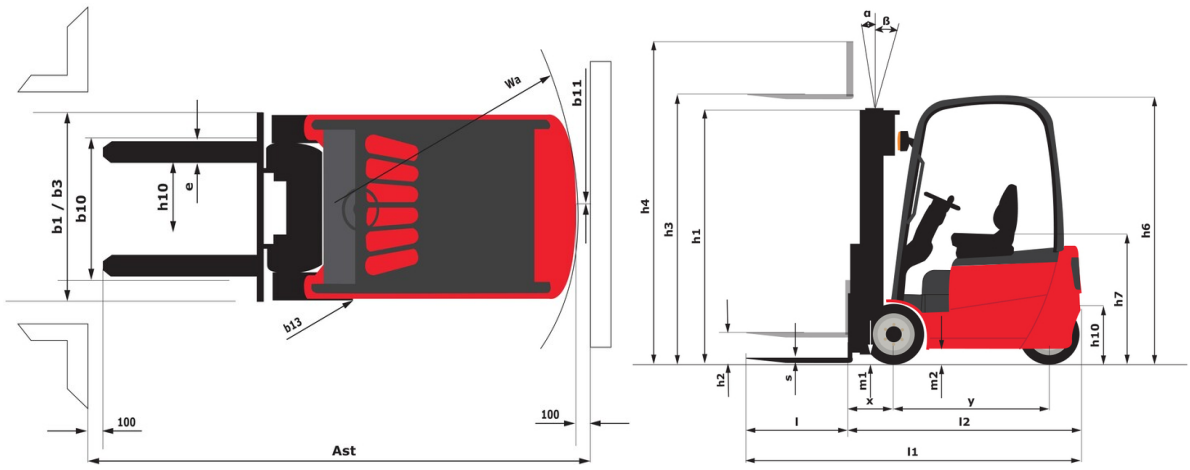

# Characteristics of masts and residual capacities

| Full Visibility Duplex (FVD) | | FVD 27 | FVD 30 | FVD 33 | FVD 36 | FVD 40 | FVD 43 | FVD 45 |
|---|---|---|---|---|---|---|---|---|
| α - Mast/fork carriage tilt, forward | ° | 5 | 5 | 5 | 5 | 5 | 5 | 5 |
| β - Mast/fork carriage tilt, backward | ° | 6 | 10 | 10 | 10 | 10 | 6 | 6 |
| h1 - Mast lowered height | mm | 1855 | 2005 | 2170 | 2305 | 2555 | 2730 | 2830 |
| h2 - Mast free lift | mm | 140 | 140 | 140 | 140 | 140 | 140 | 140 |
| h3 - Mast lifting height | mm | 2700 | 3000 | 3300 | 3600 | 4000 | 4300 | 4500 |
| h4 - Mast extended height | mm | 3350 | 3650 | 3980 | 4250 | 4650 | 4970 | 5150 |
| Residual capacity at max height | kg | 2500 | 2500 | 2500 | 2500 | 2500 | 2500 | 2450 |
| Residual capacity with integrated side shift at max heigth | kg | 2500 | 2500 | 2500 | 2500 | 2500 | 2450 | 2400 |
| Residual capacity with hooked-on side shift at max heigth | kg | 2500 | 2500 | 2500 | 2450 | 2400 | 2350 | 2300 |
| Height at max capacity | mm | 2700 | 3000 | 3300 | 3600 | 4000 | 4300 | 4500 |
| Height at max capacity with integrated sideshift | mm | 2700 | 3000 | 3300 | 3600 | 4000 | 4000 | 4000 |

| Free Lift Duplex (FLD) | | FLD 27 | FLD 30 | FLD 33 | FLD 36 | FLD 40 |
|---|---|---|---|---|---|---|
| α - Mast/fork carriage tilt, forward | ° | 5 | 5 | 5 | 5 | 5 |
| β - Mast/fork carriage tilt, backward | ° | 6 | 10 | 10 | 10 | 10 |
| h1 - Mast lowered height | mm | 1866 | 1980 | 2130 | 2280 | 2530 |
| h2 - Mast free lift | mm | 1250 | 1350 | 1500 | 1650 | 1900 |
| h3 - Mast lifting height | mm | 2700 | 3000 | 3300 | 3600 | 4000 |
| h4 - Mast extended height | mm | 3370 | 3635 | 3970 | 4270 | 4635 |
| Residual capacity at max height | kg | 2500 | 2500 | 2500 | 2500 | 2500 |
| Residual capacity with integrated side shift at max heigth | kg | 2500 | 2500 | 2500 | 2500 | 2500 |
| Residual capacity with hooked-on side shift at max heigth | kg | 2500 | 2500 | 2500 | 2450 | 2400 |
| Height at max capacity | mm | 2700 | 3000 | 3300 | 3600 | 4000 |
| Height at max capacity with integrated sideshift | mm | 2700 | 3000 | 3300 | 3600 | 4000 |

| Free Lift Triplex (FLT) | | FLT 40 | FLT 43 | FLT 45 | FLT 48 | FLT 50 | FLT 55 | FLT 60 | FLT 65 |
|---|---|---|---|---|---|---|---|---|---|
| α - Mast/fork carriage tilt, forward | ° | 5 | 5 | 5 | 5 | 5 | 3 | 3 | 3 |
| β - Mast/fork carriage tilt, backward | ° | 6 | 6 | 6 | 6 | 6 | 6 | 6 | 6 |
| h1 - Mast lowered height | mm | 1925 | 2025 | 2095 | 2195 | 2260 | 2425 | 2645 | 2820 |
| h2 - Mast free lift | mm | 1255 | 1355 | 1425 | 1525 | 1590 | 1755 | 1975 | 2150 |
| h3 - Mast lifting height | mm | 4000 | 4300 | 4500 | 4800 | 5000 | 5500 | 6000 | 6500 |
| h4 - Mast extended height | mm | 4680 | 4980 | 5230 | 5480 | 5680 | 5180 | 6690 | 7180 |
| Residual capacity at max height | kg | 2500 | 2450 | 2350 | 2250 | 2150 | 2050 | 1650 | 1350 |
| Residual capacity with integrated side shift at max heigth | kg | 2450 | 2450 | 2300 | 2200 | 2100 | 2000 | 1600 | 1300 |
| Residual capacity with hooked-on side shift at max heigth | kg | 2350 | 2300 | 2250 | 2100 | 2050 | 1900 | 1500 | 1200 |
| Height at max capacity | mm | 4000 | 4300 | 4000 | 4000 | 4000 | 4000 | 4000 | 4000 |
| Height at max capacity with integrated sideshift | mm | 4000 | 4300 | 4000 | 4000 | 4000 | 4000 | 4000 | 4000 |

**Head Office**
B.P. 249 - 430 rue de l'Aubinière
44150 Ancenis Cedex - France
Tel: +33 (0)2 40 09 10 11 - Fax: +33 (0)2 40 09 10 97
www.manitou.com

This publication provides a description of the configuration versions and options for Manitou products, which may differ for equipment. The equipment presented in this brochure may be part of a series, as an option, or it may not be available, depending on the versions. Manitou reserves the right, at any time and without notice, to amend the specifications described and represented. The specifications provided do not bind the manufacturer. For more details, please contact your Manitou agent. This is not a contractually binding document. The presentation of the products is not contractually binding. List of specifications non-exhaustive. The logos as well as the visual identity of the company are owned by Manitou and cannot be used without authorisation. All rights reserved. The photos and diagrams contained in this brochure are only provided for consultation and information purposes.
MANITOU BF SA - Limited company with board of directors - Share capital: 39,668,399 euros - 857 802 508 RCS Nantes