Technical sheet :

ME 425C FOB

MANITOU
HANDLING YOUR WORLD

	Technical characteristics		Metric
1.1	Manufacturer		Manitou
1.2	Model Name		ME 425C FOB
1.3	Power source		Electrical
1.4	Operator type		Seated
1.5	Max. capacity	Q	2500 kg
1.6	Load center of gravity	c	500 mm
1.8	Load distance, centre of drive axle to fork	x	448 mm
1.9	Wheelbase	y	1485 mm
	Weight		
2.1	Service weight		4300 kg
2.2	Weight on front axle (laden) / rear axle (laden)		6060 kg / 740 kg
2.3	Weight on front axle (Unladen) / rear axle (Unladen)		1960 kg / 2340 kg
	Wheels		
3.1	Tires type		Solid tires
3.2	Dimensions of front wheels		23 x 9-10
3.3	Dimensions of rear wheels		18 x 7-8
3.5	Number of front wheels / rear wheels		2 / 2
3.5.2	Number of drive wheels		2
3.6	Front wheel gauge	b10	1058 mm
3.7	Rear wheel gauge	b11	960 mm
	Dimensions		
4.7	Height of overhead guard (cabin)	h6	2155 mm
4.8	Seat height/stand height	h7	1070 mm
4.12	Height of towing bar (coupling height)	h10	303 mm
4.19	Overall length	l1	3492 mm
4.20	Length to face of forks	l2	2342 mm
4.21	Overall width	b1	1265 mm
4.22	Forks section / width / length	s / e / l	122 mm x 1150 mm x 40 mm
4.23	Fork carriage ISO 2328 (class/form) A/B		2A
4.24	Fork carriage width	b3	1038 mm
4.31	Ground clearance below mast	m1	112 mm
4.32	Ground clearance at centre of wheelbase	m2	120 mm
4.33	Aisle Width for pallets 1000 x 1200 crossways	Ast	3738 mm
4.34	Aisle width for 800 x 1200 pallet lengthways	Ast	3938 mm
4.35	Turning radius	Wa	2090 mm
4.36	Internal turning radius (over tyres)	b13	730 mm
	Performances		
5.1	Travel speed (laden / unladen)		14 km/h-14 km/h
5.2	Lifting speed (laden / unladen)		0.23 m/s-0.43 m/s
5.3	Lowering speed (laden / unladen)		0.41 m/s-0.22 m/s
5.5	Drawbar pull (Laden / Unladen)		1800 daN / 1700 daN
5.7	Gradeability (laden / unladen)		11 % / 12 %
5.10	Service brake		Hydraulic
	Engine		
6.1	Drive motor rating S2 60 min		11 kW
6.2	Lift motor rating at S3 15%		8.60 kW
6.3	Battery according to DIN 43531/35/36 A, B, C		DIN43531 B
6.4	Battery voltage / capacity		48 V / 700 Ah
6.6	Energy consumption according to VDI cycle (kWh/h)		5.80 kWh/h
	Miscellaneous		
8.1	Type of drive control		Electronic
8.2	Working hydraulic pressure for attachments		175 bar
8.3	Oil flow rate for attachments		35 l/min
8.4	Measured/guaranteed mean noise level at the ear of the operator		< 72 dB
8.4	Sound level at the driver's ear according to DIN 12 053		72 dB

ME 425C FOB - Dimensional drawing

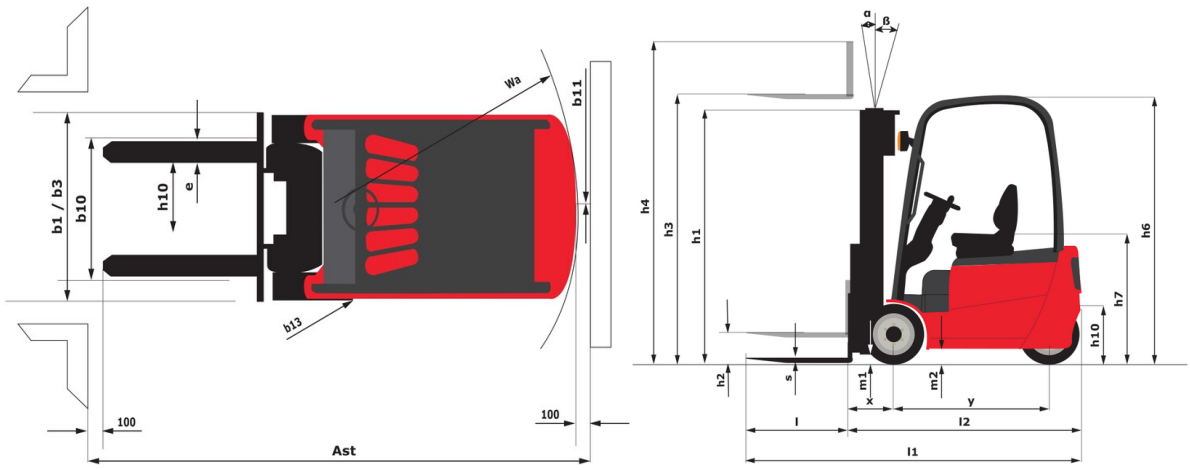

Characteristics of masts and residual capacities

Full Visibility Duplex (FVD)		FVD 27	FVD 30	FVD 33	FVD 36	FVD 40	FVD 43	FVD 45
α - Mast/fork carriage tilt, forward	°	5	5	5	5	5	5	5
β - Mast/fork carriage tilt, backward	°	6	10	10	10	10	6	6
h1 - Mast lowered height	mm	1855	2005	2170	2305	2555	2730	2830
h2 - Mast free lift	mm	140	140	140	140	140	140	140
h3 - Mast lifting height	mm	2700	3000	3300	3600	4000	4300	4500
h4 - Mast extended height	mm	3350	3650	3980	4250	4650	4970	5150
Residual capacity at max height	kg	2500	2500	2500	2500	2500	2500	2450
Residual capacity with integrated side shift at max heigth	kg	2500	2500	2500	2500	2500	2450	2400
Residual capacity with hooked-on side shift at max heigth	kg	2500	2500	2500	2450	2400	2350	2300
Height at max capacity	mm	2700	3000	3300	3600	4000	4300	4500
Height at max capacity with integrated sideshift	mm	2700	3000	3300	3600	4000	4000	4000

Free Lift Duplex (FLD)		FLD 27	FLD 30	FLD 33	FLD 36	FLD 40
α - Mast/fork carriage tilt, forward	°	5	5	5	5	5
β - Mast/fork carriage tilt, backward	°	6	10	10	10	10
h1 - Mast lowered height	mm	1866	1980	2130	2280	2530
h2 - Mast free lift	mm	1250	1350	1500	1650	1900
h3 - Mast lifting height	mm	2700	3000	3300	3600	4000
h4 - Mast extended height	mm	3370	3635	3970	4270	4635
Residual capacity at max height	kg	2500	2500	2500	2500	2500
Residual capacity with integrated side shift at max heigth	kg	2500	2500	2500	2500	2500
Residual capacity with hooked-on side shift at max heigth	kg	2500	2500	2500	2450	2400
Height at max capacity	mm	2700	3000	3300	3600	4000
Height at max capacity with integrated sideshift	mm	2700	3000	3300	3600	4000

Free Lift Triplex (FLT)		FLT 40	FLT 43	FLT 45	FLT 48	FLT 50	FLT 55	FLT 60	FLT 65
α - Mast/fork carriage tilt, forward	°	5	5	5	5	5	3	3	3
β - Mast/fork carriage tilt, backward	°	6	6	6	6	6	6	6	6
h1 - Mast lowered height	mm	1925	2025	2095	2195	2260	2425	2645	2820
h2 - Mast free lift	mm	1255	1355	1425	1525	1590	1755	1975	2150
h3 - Mast lifting height	mm	4000	4300	4500	4800	5000	5500	6000	6500
h4 - Mast extended height	mm	4680	4980	5230	5480	5680	5180	6690	7180
Residual capacity at max height	kg	2500	2450	2350	2250	2150	2050	1650	1350
Residual capacity with integrated side shift at max heigth	kg	2450	2450	2300	2200	2100	2000	1600	1300
Residual capacity with hooked-on side shift at max heigth	kg	2350	2300	2250	2100	2050	1900	1500	1200
Height at max capacity	mm	4000	4300	4000	4000	4000	4000	4000	4000
Height at max capacity with integrated sideshift	mm	4000	4300	4000	4000	4000	4000	4000	4000

Head Office
B.P. 249 - 430 rue de l'Aubinière
44150 Ancenis Cedex - France
Tel: +33 (0)2 40 09 10 11 - Fax: +33 (0)2 40 09 10 97
www.manitou.com

This publication provides a description of the configuration versions and options for Manitou products, which may differ for equipment. The equipment presented in this brochure may be part of a series, as an option, or it may not be available, depending on the versions. Manitou reserves the right, at any time and without notice, to amend the specifications described and represented. The specifications provided do not bind the manufacturer. For more details, please contact your Manitou agent. This is not a contractually binding document. The presentation of the products is not contractually binding. List of specifications non-exhaustive. The logos as well as the visual identity of the company are owned by Manitou and cannot be used without authorisation. All rights reserved. The photos and diagrams contained in this brochure are only provided for consultation and information purposes.
MANITOU BF SA - Limited company with board of directors - Share capital: 39,668,399 euros - 857 802 508 RCS Nantes