Technical sheet :

ME 425 FOB

MANITOU
HANDLING YOUR WORLD

	Technical characteristics		Metric
1.1	Manufacturer		Manitou
1.2	Model Name		ME 425 FOB
1.3	Power source		Electrical
1.4	Operator type		Seated
1.5	Max. capacity	Q	2500 kg
1.6	Load center of gravity	c	500 mm
1.8	Load distance, centre of drive axle to fork	x	425 mm
1.9	Wheelbase	y	1750 mm
	Weight		
2.1	Service weight		5100 kg
2.2	Weight on front axle (laden) / rear axle (laden)		6620 kg / 980 kg
2.3	Weight on front axle (Unladen) / rear axle (Unladen)		2500 kg / 2600 kg
	Wheels		
3.1	Tires type		Solid tires
3.2	Dimensions of front wheels		23 x 9-10
3.3	Dimensions of rear wheels		18 x 7-8
3.5	Number of front wheels / rear wheels		2 / 2
3.5.2	Number of drive wheels		2
3.6	Front wheel gauge	b10	1073 mm
3.7	Rear wheel gauge	b11	960 mm
	Dimensions		
4.7	Height of overhead guard (cabin)	h6	2240 mm
4.8	Seat height/stand height	h7	1190 mm
4.12	Height of towing bar (coupling height)	h10	625 mm
4.19	Overall length	l1	3640 mm
4.20	Length to face of forks	l2	2490 mm
4.21	Overall width	b1	1275 mm
4.22	Forks section / width / length	s / e / l	122 mm x 1150 mm x 40 mm
4.23	Fork carriage ISO 2328 (class/form) A/B		2A
4.24	Fork carriage width	b3	1100 mm
4.31	Ground clearance below mast	m1	105 mm
4.32	Ground clearance at centre of wheelbase	m2	115 mm
4.33	Aisle Width for pallets 1000 x 1200 crossways	Ast	4025 mm
4.34	Aisle width for 800 x 1200 pallet lengthways	Ast	4225 mm
4.35	Turning radius	Wa	2400 mm
4.36	Internal turning radius (over tyres)	b13	730 mm
	Performances		
5.1	Travel speed (laden / unladen)		19 km/h-20 km/h
5.2	Lifting speed (laden / unladen)		0.46 m/s-0.62 m/s
5.3	Lowering speed (laden / unladen)		0.47 m/s-0.42 m/s
5.5	Drawbar pull (Laden / Unladen)		1740 daN / 1640 daN
5.7	Gradeability (laden / unladen)		16 % / 21 %
5.10	Service brake		Oil bath
	Engine		
6.1	Drive motor rating S2 60 min		18.50 kW
6.2	Lift motor rating at S3 15%		25.40 kW
6.3	Battery according to DIN 43531/35/36 A, B, C		DIN43536 A
6.4	Battery voltage / capacity		80 V / 700 Ah
6.6	Energy consumption according to VDI cycle (kWh/h)		10.50 kWh/h
	Miscellaneous		
8.1	Type of drive control		Electronic
8.2	Working hydraulic pressure for attachments		210 bar
8.3	Oil flow rate for attachments		65 l/min
8.4	Measured/guaranteed mean noise level at the ear of the operator		< 71 dB
8.4	Sound level at the driver's ear according to DIN 12 053		71 dB

ME 425 FOB - Dimensional drawing

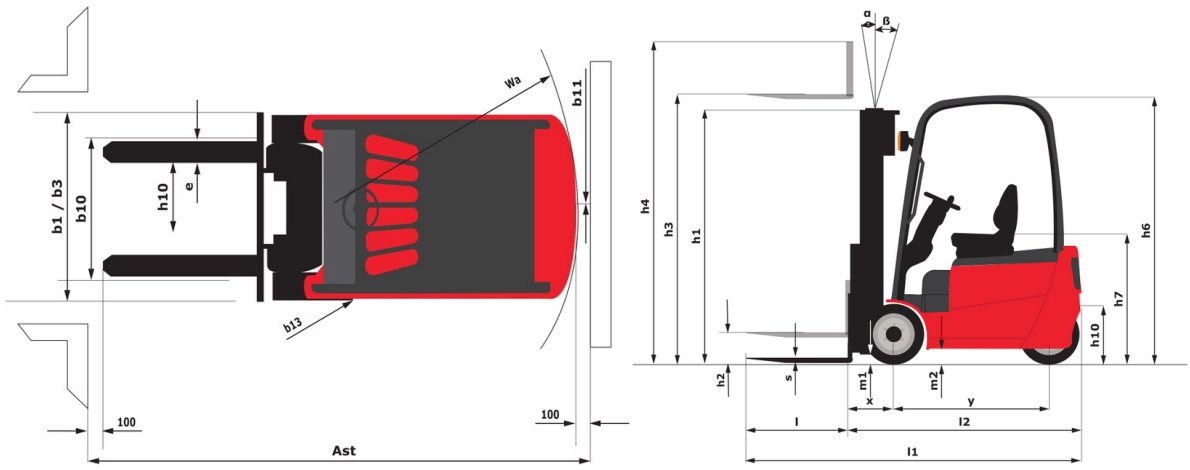

Characteristics of masts and residual capacities

Full Visibility Duplex (FVD)		FVD 30	FVD 33	FVD 35	FVD 37	FVD 40	FVD 43	FVD 45	FVD 48	FVD 50
α - Mast/fork carriage tilt, forward	°	5	5	5	5	5	5	5	5	5
β - Mast/fork carriage tilt, backward	°	8	8	8	8	8	5	5	5	5
h1 - Mast lowered height	mm	2085	2235	2335	2485	2685	2835	2935	3085	3185
h2 - Mast free lift	mm	140	140	140	140	140	140	140	140	140
h3 - Mast lifting height	mm	3000	3300	3500	3700	4000	4300	4500	4800	5000
h4 - Mast extended height	mm	3643	3943	4143	4243	4643	4943	5143	5443	5643
Residual capacity at max height	kg	2500	2500	2500	2500	2500	2500	2500	2500	2500
Residual capacity with integrated side shift at max heigth	kg	2500	2500	2500	2500	2500	2500	2500	2500	2500
Residual capacity with hooked-on side shift at max heigth	kg	2500	2500	2500	2500	2500	2500	2500	2500	2500
Height at max capacity	mm	3000	3300	3500	3700	4000	4300	4500	4800	5000
Height at max capacity with integrated sideshift	mm	3000	3300	3500	3700	4000	4300	4500	4800	5000

Free Lift Duplex (FLD)		FLD 30	FLD 33	FLD 37	FLD 40
α - Mast/fork carriage tilt, forward	°	5	5	5	5
β - Mast/fork carriage tilt, backward	°	8	8	8	8
h1 - Mast lowered height	mm	2035	2185	2385	2585
h2 - Mast free lift	mm	1370	1520	1720	1920
h3 - Mast lifting height	mm	3000	3300	3700	4000
h4 - Mast extended height	mm	3665	3965	4365	4665
Residual capacity at max height	kg	2500	2500	2500	2500
Residual capacity with integrated side shift at max heigth	kg	2500	2500	2500	2500
Residual capacity with hooked-on side shift at max heigth	kg	2500	2500	2500	2500
Height at max capacity	mm	3000	3300	3700	4000
Height at max capacity with integrated sideshift	mm	3000	3300	3700	4000

Free Lift Triplex (FLT)		FLT 40	FLT 43	FLT 48	FLT 50	FLT 55	FLT 60
α - Mast/fork carriage tilt, forward	°	5	5	5	5	5	5
β - Mast/fork carriage tilt, backward	°	5	5	5	5	5	5
h1 - Mast lowered height	mm	2035	2135	2285	2385	2585	2835
h2 - Mast free lift	mm	1370	1470	1620	1720	1920	2170
h3 - Mast lifting height	mm	4000	4300	4800	5000	5500	6000
h4 - Mast extended height	mm	4665	4965	5465	5665	6165	6665
Residual capacity at max height	kg	2500	2500	2500	2500	2500	2500
Residual capacity with integrated side shift at max heigth	kg	2500	2500	2500	2500	2500	2500
Residual capacity with hooked-on side shift at max heigth	kg	2500	2500	2500	2500	2450	2400
Height at max capacity	mm	4000	4300	4800	5000	5500	6000
Height at max capacity with integrated sideshift	mm	4000	4300	4800	5000	5500	6000

Head Office
B.P. 249 - 430 rue de l'Aubinière
44150 Ancenis Cedex - France
Tel: +33 (0)2 40 09 10 11 - Fax: +33 (0)2 40 09 10 97
www.manitou.com

This publication provides a description of the configuration versions and options for Manitou products, which may differ for equipment. The equipment presented in this brochure may be part of a series, as an option, or it may not be available, depending on the versions. Manitou reserves the right, at any time and without notice, to amend the specifications described and represented. The specifications provided do not bind the manufacturer. For more details, please contact your Manitou agent. This is not a contractually binding document. The presentation of the products is not contractually binding. List of specifications non-exhaustive. The logos as well as the visual identity of the company are owned by Manitou and cannot be used without authorisation. All rights reserved. The photos and diagrams contained in this brochure are only provided for consultation and information purposes.
MANITOU BF SA - Limited company with board of directors - Share capital: 39,668,399 euros - 857 802 508 RCS Nantes