Technical sheet :

ME 440 FOB

MANITOU
HANDLING YOUR WORLD

	Technical characteristics		Metric
1.1	Manufacturer		Manitou
1.2	Model Name		ME 440 FOB
1.3	Power source		Electrical
1.4	Operator type		Seated
1.5	Max. capacity	Q	4000 kg
1.6	Load center of gravity	c	500 mm
1.8	Load distance, centre of drive axle to fork	x	550 mm
1.9	Wheelbase	y	2000 mm
	Weight		
2.1	Service weight		6600 kg
2.2	Weight on front axle (laden) / rear axle (laden)		9440 kg / 1160 kg
2.3	Weight on front axle (Unladen) / rear axle (Unladen)		3960 kg / 2640 kg
	Wheels		
3.1	Tires type		Solid tires
3.2	Dimensions of front wheels		250/15
3.3	Dimensions of rear wheels		7.00-12
3.5	Number of front wheels / rear wheels		2 / 2
3.5.2	Number of drive wheels		2
3.6	Front wheel gauge	b10	1130 mm
3.7	Rear wheel gauge	b11	1100 mm
	Dimensions		
4.7	Height of overhead guard (cabin)	h6	2300 mm
4.8	Seat height/stand height	h7	1235 mm
4.12	Height of towing bar (coupling height)	h10	460 mm
4.19	Overall length	l1	4165 mm
4.20	Length to face of forks	l2	3015 mm
4.21	Overall width	b1	1380 mm
4.22	Forks section / width / length	s / e / l	122 mm x 1150 mm x 50 mm
4.23	Fork carriage ISO 2328 (class/form) A/B		3A
4.24	Fork carriage width	b3	1100 mm
4.31	Ground clearance below mast	m1	110 mm
4.32	Ground clearance at centre of wheelbase	m2	219 mm
4.33	Aisle Width for pallets 1000 x 1200 crossways	Ast	4470 mm
4.34	Aisle width for 800 x 1200 pallet lengthways	Ast	4670 mm
4.35	Turning radius	Wa	2720 mm
4.36	Internal turning radius (over tyres)	b13	805 mm
	Performances		
5.1	Travel speed (laden / unladen)		13.50 km/h-14 km/h
5.2	Lifting speed (laden / unladen)		0.26 m/s-0.40 m/s
5.3	Lowering speed (laden / unladen)		0.50 m/s-0.30 m/s
5.5	Drawbar pull (Laden)		2400 daN
5.7	Gradeability (laden / unladen)		15 % / 16 %
5.10	Service brake		Hydraulic
	Engine		
6.1	Drive motor rating S2 60 min		16.60 kW
6.2	Lift motor rating at S3 15%		25.40 kW
6.3	Battery according to DIN 43531/35/36 A, B, C		DIN43536 A
6.4	Battery voltage / capacity		80 V / 700 Ah
6.6	Energy consumption according to VDI cycle (kWh/h)		12.50 kWh/h
	Miscellaneous		
8.1	Type of drive control		Electronic
8.2	Working hydraulic pressure for attachments		210 bar
8.3	Oil flow rate for attachments		65 l/min
8.4	Measured/guaranteed mean noise level at the ear of the operator		< 78 dB

ME 440 FOB - Dimensional drawing

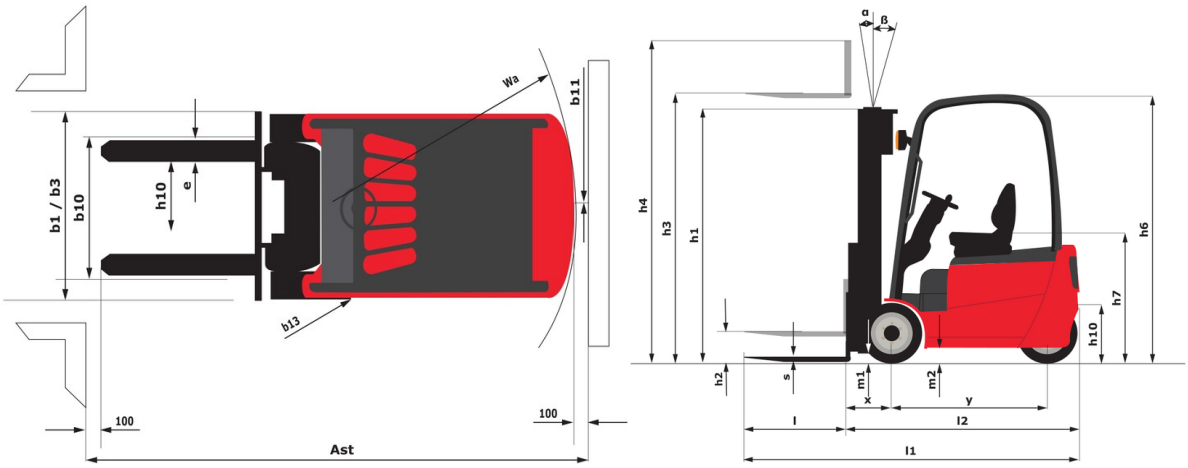

Characteristics of masts and residual capacities

Full Visibility Duplex (FVD)		FVD 30	FVD 33	FVD 35	FVD 40	FVD 43	FVD 45	FVD 48	FVD 50
α - Mast/fork carriage tilt, forward	°	6	6	6	6	6	6	6	6
β - Mast/fork carriage tilt, backward	°	12	12	12	12	6	6	6	6
h1 - Mast lowered height	mm	2185	2335	2435	2735	2900	3010	3175	3285
h2 - Mast free lift	mm	150	150	150	150	150	150	150	150
h3 - Mast lifting height	mm	3000	3300	3500	4000	4300	4500	4800	5000
h4 - Mast extended height	mm	3770	4070	4270	4770	5070	5270	5570	5770
Residual capacity at max height	kg	4000	4000	4000	4000	4000	4000	4000	4000
Residual capacity with integrated side shift at max heigth	kg	4000	4000	4000	4000	4000	4000	4000	4000
Residual capacity with hooked-on side shift at max heigth	kg	3800	3800	3800	3800	3800	3800	3800	3800
Height at max capacity	mm	3000	3300	3500	4000	4300	4500	4800	5000
Height at max capacity with integrated sideshift	mm	3000	3300	3500	4000	4300	4500	4800	5000

Free Lift Duplex (FLD)		FLD 30	FLD 33	FLD 40
α - Mast/fork carriage tilt, forward	°	6	6	6
β - Mast/fork carriage tilt, backward	°	12	12	12
h1 - Mast lowered height	mm	2166	2316	2666
h2 - Mast free lift	mm	1365	1515	1865
h3 - Mast lifting height	mm	3000	3300	4000
h4 - Mast extended height	mm	3805	4105	4805
Residual capacity at max height	kg	4000	4000	4000
Residual capacity with integrated side shift at max heigth	kg	4000	4000	4000
Residual capacity with hooked-on side shift at max heigth	kg	3800	3800	3800
Height at max capacity	mm	3000	3300	4000
Height at max capacity with integrated sideshift	mm	3000	3300	4000

Free Lift Triplex (FLT)		FLT 43	FLT 48	FLT 50	FLT 55	FLT 60
α - Mast/fork carriage tilt, forward	°	6	6	6	3	3
β - Mast/fork carriage tilt, backward	°	12	6	6	6	6
h1 - Mast lowered height	mm	2020	2280	2350	2515	2730
h2 - Mast free lift	mm	1218	1478	1548	1710	1928
h3 - Mast lifting height	mm	4000	4800	5000	5500	6000
h4 - Mast extended height	mm	4805	5605	5805	6305	6805
Residual capacity at max height	kg	4000	4000	3800	3700	3600
Residual capacity with integrated side shift at max heigth	kg	4000	3900	3700	3600	3500
Residual capacity with hooked-on side shift at max heigth	kg	3800	3800	3700	3500	3400
Height at max capacity	mm	2500	2500	2500	2500	2500

MANITOU
HANDLING YOUR WORLD

Head Office
B.P. 249 - 430 rue de l'Aubinière
44150 Ancenis Cedex - France
Tel: +33 (0)2 40 09 10 11 - Fax: +33 (0)2 40 09 10 97
www.manitou.com

This publication provides a description of the configuration versions and options for Manitou products, which may differ for equipment. The equipment presented in this brochure may be part of a series, as an option, or it may not be available, depending on the versions. Manitou reserves the right, at any time and without notice, to amend the specifications described and represented. The specifications provided do not bind the manufacturer. For more details, please contact your Manitou agent. This is not a contractually binding document. The presentation of the products is not contractually binding. List of specifications non-exhaustive. The logos as well as the visual identity of the company are owned by Manitou and cannot be used without authorisation. All rights reserved. The photos and diagrams contained in this brochure are only provided for consultation and information purposes.
MANITOU BF SA - Limited company with board of directors - Share capital: 39,668,399 euros - 857 802 508 RCS Nantes