Technical sheet :

ME 316 LIFT

MANITOU
HANDLING YOUR WORLD

	Technical characteristics		Metric
1.1	Manufacturer		Manitou
1.2	Model Name		ME 316 LIFT
1.3	Power source		Electrical
1.4	Operator type		Seated
1.5	Max. capacity	Q	1600 kg
1.6	Load center of gravity	c	500 mm
1.8	Load distance, centre of drive axle to fork	x	359.50 mm
1.9	Wheelbase	y	1277 mm
	Standard mast reference of the machine		FVD 30
	Weight		
2.1	Service weight		2940 kg
2.2	Weight on front axle (laden) / rear axle (laden)		3950 kg / 590 kg
2.3	Weight on front axle (Unladen) / rear axle (Unladen)		1340 kg / 1600 kg
	Wheels		
3.1	Tires type		Solid tires
3.2	Dimensions of front wheels		18x7-8
3.3	Dimensions of rear wheels		15x4,5-8
3.5	Number of front wheels / rear wheels		2 / 1
3.5.2	Number of drive wheels		2
3.6	Front wheel gauge	b10	914 mm
3.7	Rear wheel gauge	b11	178 mm
	Dimensions		
4.7	Height of overhead guard (cabin)	h6	2147 mm
4.8	Seat height/stand height	h7	1120 mm
4.12	Height of towing bar (coupling height)	h10	525 mm
4.19	Overall length	l1	2776 mm
4.20	Length to face of forks	l2	1856 mm
4.21	Overall width	b1	1086 mm
4.22.1	Forks width / length	e / l	35 mm x 100 mm
4.23	Fork carriage ISO 2328 (class/form) A/B		2A
4.24	Fork carriage width	b3	1000 mm
4.31	Ground clearance below mast	m1	100 mm
4.32	Ground clearance at centre of wheelbase	m2	110 mm
4.33	Aisle Width for pallets 1000 x 1200 crossways	Ast	3156 mm
4.34	Aisle width for 800 x 1200 pallet lengthways	Ast	3280 mm
4.35	Turning radius	Wa	1470 mm
	Performances		
5.1	Travel speed (laden / unladen)		16 km/h-16 km/h
5.2	Lifting speed (laden / unladen)		0.45 m/s-0.60 m/s
5.3	Lowering speed (laden / unladen)		0.46 m/s-0.44 m/s
5.5	Drawbar pull (Laden / Unladen)		3300 daN / 3900 daN
5.7	Gradeability (laden / unladen)		16 % / 18 %
5.10	Service brake		Hydraulic
	Engine		
6.1	Drive motor rating S2 60 min		2.50 kW
6.2	Lift motor rating at S3 15%		11 kW
6.3	Battery according to DIN 43531/35/36 A, B, C		No
6.4	Battery voltage / capacity		76.80 V / 230 Ah
6.5	Battery weight (+/- 5%)		185 kg
6.6	Energy consumption according to VDI cycle (kWh/h)		4.60 kWh/h
	Miscellaneous		
8.2	Working hydraulic pressure for attachments		185 bar
8.3	Oil flow rate for attachments		30 l/min
8.4	Sound level at the driver's ear according to DIN 12 053		70 dB

ME 316 LIFT - Dimensional drawing

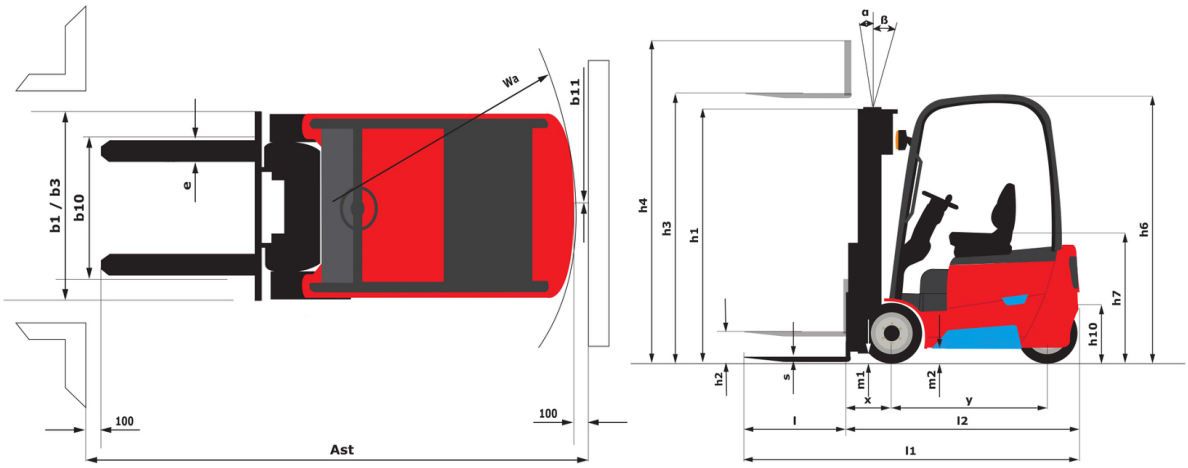

Characteristics of masts and residual capacities

Full Visibility Duplex (FVD)		FVD 30	FVD 33	FVD 40	FVD 45
α - Mast/fork carriage tilt, forward	°	7	7	7	7
β - Mast/fork carriage tilt, backward	°	6	6	6	6
h1 - Mast lowered height	mm	1988	2138	2588	2838
h2 - Mast free lift	mm	140	140	140	140
h3 - Mast lifting height	mm	3000	3300	4000	4500
h4 - Mast extended height	mm	3560	3860	4560	5060
Residual capacity at max height	kg	1600	1600	1600	1500
Residual capacity with integrated side shift at max heigth	kg	1550	1550	1550	1450

Free Lift Triplex (FLT)		FLT 40	FLT 45	FLT 48	FLT 50	FLT 55	FLT 60	FLT 65
α - Mast/fork carriage tilt, forward	°	3.50	3.50	3.50	3.50	3.50	3.50	3.50
β - Mast/fork carriage tilt, backward	°	5	5	5	5	5	5	5
h1 - Mast lowered height	mm	1888	2038	2138	2213	2388	2588	2788
h2 - Mast free lift	mm	1292	1392	1492	1582	1792	1992	2192
h3 - Mast lifting height	mm	4000	4500	4800	5000	5500	6000	6500
h4 - Mast extended height	mm	4552	5052	5352	5552	6052	6552	7052
Residual capacity at max height	kg	1600	1500	1450	1400	1250	1100	900
Residual capacity with integrated side shift at max heigth	kg	1550	1450	1400	1350	1200	1050	850

MANITOU
HANDLING YOUR WORLD

Head Office
B.P. 249 - 430 rue de l'Aubinière
44150 Ancenis Cedex - France
Tel: +33 (0)2 40 09 10 11 - Fax: +33 (0)2 40 09 10 97
www.manitou.com

This publication provides a description of the configuration versions and options for Manitou products, which may differ for equipment. The equipment presented in this brochure may be part of a series, as an option, or it may not be available, depending on the versions. Manitou reserves the right, at any time and without notice, to amend the specifications described and represented. The specifications provided do not bind the manufacturer. For more details, please contact your Manitou agent. This is not a contractually binding document. The presentation of the products is not contractually binding. List of specifications non-exhaustive. The logos as well as the visual identity of the company are owned by Manitou and cannot be used without authorisation. All rights reserved. The photos and diagrams contained in this brochure are only provided for consultation and information purposes.
MANITOU BF SA - Limited company with board of directors - Share capital: 39,668,399 euros - 857 802 508 RCS Nantes