Technical sheet :

ME 425 LIFT

MANITOU
HANDLING YOUR WORLD

	Technical characteristics		Metric
1.1	Manufacturer		Manitou
1.2	Model Name		ME 425 LIFT
1.3	Power source		Electrical
1.4	Operator type		Seated
1.5	Max. capacity	Q	2500 kg
1.6	Load center of gravity	c	500 mm
1.8	Load distance, centre of drive axle to fork	x	431 mm
1.9	Wheelbase	y	1520 mm
	Standard mast reference of the machine		FVD 30
	Weight		
2.1	Service weight		3875 kg
2.2	Weight on front axle (laden) / rear axle (laden)		5595 kg / 780 kg
2.3	Weight on front axle (Unladen) / rear axle (Unladen)		1580 kg / 2295 kg
	Wheels		
3.1	Tires type		Solid tires
3.2	Dimensions of front wheels		23x9-10-18PR
3.3	Dimensions of rear wheels		18x7-8-14PR
3.5	Number of front wheels / rear wheels		2 / 2
3.5.2	Number of drive wheels		2
3.6	Front wheel gauge	b10	1046 mm
3.7	Rear wheel gauge	b11	960 mm
	Dimensions		
4.7	Height of overhead guard (cabin)	h6	2186 mm
4.8	Seat height/stand height	h7	1155 mm
4.12	Height of towing bar (coupling height)	h10	440 mm
4.19	Overall length	l1	3357 mm
4.20	Length to face of forks	l2	2287 mm
4.21	Overall width	b1	1271 mm
4.22.1	Forks width / length	e / l	40 mm x 122 mm
4.23	Fork carriage ISO 2328 (class/form) A/B		2A
4.24	Fork carriage width	b3	1038 mm
4.31	Ground clearance below mast	m1	120 mm
4.32	Ground clearance at centre of wheelbase	m2	115 mm
4.33	Aisle Width for pallets 1000 x 1200 crossways	Ast	3670 mm
4.34	Aisle width for 800 x 1200 pallet lengthways	Ast	3866 mm
4.35	Turning radius	Wa	2035 mm
	Performances		
5.1	Travel speed (laden / unladen)		19 km/h-20 km/h
5.2	Lifting speed (laden / unladen)		0.50 m/s-0.60 m/s
5.3	Lowering speed (laden / unladen)		0.51 m/s-0.54 m/s
5.5	Drawbar pull (Laden / Unladen)		8000 daN / 9000 daN
5.7	Gradeability (laden / unladen)		13 % / 24 %
5.10	Service brake		Hydraulic
	Engine		
6.1	Drive motor rating S2 60 min		20 kW
6.2	Lift motor rating at S3 15%		26 kW
6.3	Battery according to DIN 43531/35/36 A, B, C		No
6.4	Battery voltage / capacity		76.80 V / 304 Ah
6.5	Battery weight (+/- 5%)		225 kg
6.6	Energy consumption according to VDI cycle (kWh/h)		6.52 kWh/h
	Miscellaneous		
8.2	Working hydraulic pressure for attachments		160 bar
8.3	Oil flow rate for attachments		25 l/min
8.4	Sound level at the driver's ear according to DIN 12 053		70 dB

ME 425 LIFT - Dimensional drawing

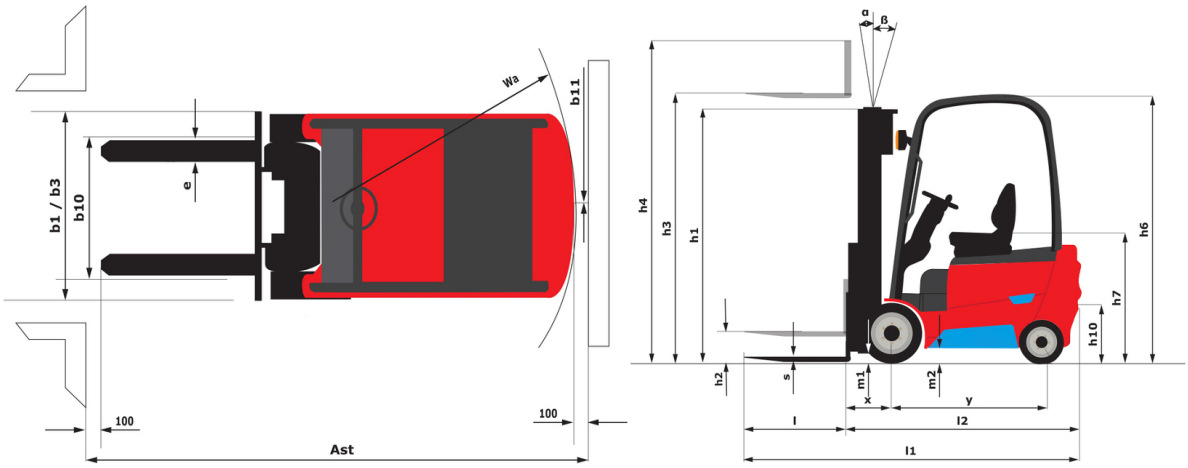

Characteristics of masts and residual capacities

Full Visibility Duplex (FVD)		FVD 30	FVD 33	FVD 37	FVD 40	FVD 45
α - Mast/fork carriage tilt, forward	°	6	6	6	6	6
β - Mast/fork carriage tilt, backward	°	12	12	12	12	6
h1 - Mast lowered height	mm	2000	2150	2400	2600	2850
h2 - Mast free lift	mm	140	140	140	140	140
h3 - Mast lifting height	mm	3000	3300	3700	4000	4500
h4 - Mast extended height	mm	4046	4346	4746	5046	5546
Residual capacity at max height	kg	2500	2500	2500	2500	2450
Residual capacity with integrated side shift at max heigth	kg	2450	2450	2450	2450	2400

Free Lift Triplex (FLT)		FLT 40	FLT 45	FLT 48	FLT 50	FLT 55	FLT 60	FLT 65
α - Mast/fork carriage tilt, forward	°	6	6	6	6	3	3	3
β - Mast/fork carriage tilt, backward	°	6	6	6	6	6	6	6
h1 - Mast lowered height	mm	1950	2100	2200	2300	2450	2650	2850
h2 - Mast free lift	mm	904	1054	1154	1254	1404	1604	1804
h3 - Mast lifting height	mm	4000	4500	4800	5000	5500	6000	6500
h4 - Mast extended height	mm	5046	5546	5846	6046	6546	7046	7546
Residual capacity at max height	kg	2500	2350	2250	2150	2050	1850	1600
Residual capacity with integrated side shift at max heigth	kg	2450	2300	2200	2100	2000	1800	1550

Head Office
B.P. 249 - 430 rue de l'Aubinière
44150 Ancenis Cedex - France
Tel: +33 (0)2 40 09 10 11 - Fax: +33 (0)2 40 09 10 97
www.manitou.com

This publication provides a description of the configuration versions and options for Manitou products, which may differ for equipment. The equipment presented in this brochure may be part of a series, as an option, or it may not be available, depending on the versions. Manitou reserves the right, at any time and without notice, to amend the specifications described and represented. The specifications provided do not bind the manufacturer. For more details, please contact your Manitou agent. This is not a contractually binding document. The presentation of the products is not contractually binding. List of specifications non-exhaustive. The logos as well as the visual identity of the company are owned by Manitou and cannot be used without authorisation. All rights reserved. The photos and diagrams contained in this brochure are only provided for consultation and information purposes.
MANITOU BF SA - Limited company with board of directors - Share capital: 39,668,399 euros - 857 802 508 RCS Nantes