Technical sheet :

# ES 316 L P EASY

MANITOU
HANDLING YOUR WORLD

| | Technical characteristics | | Metric |
|---|---|---|---|
| 1.1 | Manufacturer | | MANITOU |
| 1.2 | Model Name | | ES 316 L P Easy |
| 1.3 | Power source | | Electrical - Lithium |
| 1.4 | Operator type | | Walking alongside |
| 1.5 | Max. capacity | Q | 1600 kg |
| 1.6 | Load center of gravity | c | 600 mm |
| 1.8 | Load distance, centre of drive axle to fork (low/raised) - Low position / Raised position | x / x | 768 mm / 700 mm |
| 1.9 | Wheelbase | y | 1469 mm |
| 1.9 | Wheelbase (lower position) | y | 1401 mm |
| | **Weight** | | |
| 2.1 | Service weight | | 1200 kg |
| 2.2 | Weight on front axle (laden) / rear axle (laden) | | 1100 kg / 1700 kg |
| 2.3 | Weight on front axle (Unladen) / rear axle (Unladen) | | 850 kg / 350 kg |
| | **Wheels** | | |
| 3.1 | Tires type | | Polyurethane cushion |
| 3.3 | Number of load wheels / Size of load wheels | | 4 / 83X73 |
| 3.4 | Number of stabilizer wheels / Size of the stabilizer wheels | | 1 / 140X55 |
| 3.5 | Number of front wheels / rear wheels | | 2 / 4 |
| 3.5.2 | Number of drive wheels / Size of drive wheels | | 1/250X80 |
| 3.6 | Front wheel gauge | b10 | 516 mm |
| 3.7 | Rear wheel gauge | b11 | 385 mm |
| | **Dimensions** | | |
| 4.10 | Height of wheel arms | h8 | 80 mm |
| 4.15 | Fork height in low position | h13 | 90 mm |
| 4.19.1 | Overall length (folded platform / unfolded platform) | l1 / l1 | 2088 mm / 2536 mm |
| 4.20.1 | Length to face of forks (folded platform / unfolded platform) | l2 / l2 | 938 mm / 1386 mm |
| 4.21 | Overall width | b1 | 800 mm |
| 4.22 | Forks section / width / length | s / e / l | 65 mm / 185 mm / 1150 mm |
| 4.24 | Fork carriage width | b3 | 680 mm |
| 4.25 | Forks spread | b5 | 570 mm |
| 4.32 | Ground clearance at centre of wheelbase | m2 | 15 mm |
| 4.34.1.1 | Aisle Width for pallets 1000 x 1200 crossways (folded platform / unfolded platform) | Ast / Ast | 2563 mm / 2998 mm |
| 4.34.2.1 | Aisle width for 800 x 1200 pallet lengthways (folded platform / unfolded platform) | Ast / Ast | 2509 mm / 2938 mm |
| 4.6 | Initial lift | h5 | 125 mm |
| 4.35.1 | Turning radius (folded platform / unfolded platform) | Wa / Wa | 1723 mm / 2157 mm |
| 4.9 | Height tiller min. / max. | h14 / h14 | 1170 mm / 1400 mm |
| | **Performances** | | |
| 5.1 | Speed of travel laden (platform unfolded and arms unfolded) / unladen (platform unfolded and arms unfolded) | | 9 km/h / 10.50 km/h |
| 5.1 | Travel speed (laden / unladen) | | 6 km/h / 6 km/h |
| 5.2 | Lifting speed (laden / unladen) | | 0.18 m/s / 0.40 m/s |
| 5.3 | Lowering speed (laden / unladen) | | 0.45 m/s / 0.40 m/s |
| 5.8 | Max Gradeability (laden / unladen) | | 8 % / 16 % |
| 5.10 | Service brake | | Electro magnetic |
| | **Engine** | | |
| 6.1 | Drive motor rating S2 60 min | | 2.20 kW |
| 6.2 | Lift motor rating at S3 15% | | 4.20 kW |
| 6.4 | Battery voltage / capacity | | 48 V / 105 Ah |
| 6.5 | Battery weight (+/- 5%) | | 65 kg |

## ES 316 L P Easy - Dimensional drawing

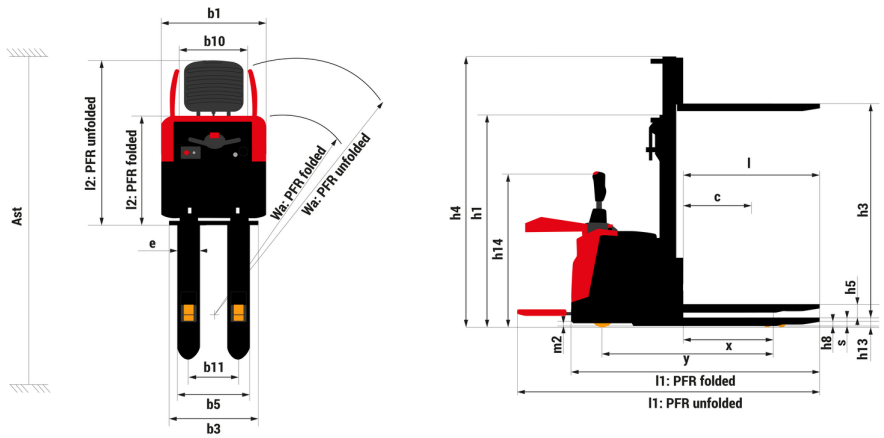

# Characteristics of masts and residual capacities

| Full Visibility Duplex (FVD) | | FVD 29 | FVD 35 |
|---|---|---|---|
| h1 - Mast lowered height | mm | 1990 | 2290 |
| h2 - Mast free lift | mm | 90 | 90 |
| h3 - Mast lifting height | mm | 2900 | 3500 |
| h4 - Mast extended height | mm | 3440 | 4040 |
| Residual capacity at max height | kg | 1200 | 930 |
| Height at max capacity | mm | 2490 | 2490 |

| Free Lift Triplex (FLT) | | FLT 42 | FLT 55 |
|---|---|---|---|
| h1 - Mast lowered height | mm | 1890 | 2330 |
| h2 - Mast free lift | mm | 1390 | 1830 |
| h3 - Mast lifting height | mm | 4200 | 5500 |
| h4 - Mast extended height | mm | 4720 | 6020 |
| Residual capacity at max height | kg | 780 | 480 |
| Height at max capacity | mm | 2490 | 2490 |

# Equipment

| Standard |
|---|
| Battery - 5.04kWh - Lithium-ion |
| Onboard charger - 0.96kW AC - Lithium-ion - Single-phase |
| Pincode - On tiller |
| Polyurethane tandem-load wheels |

| Optional |
|---|
| Cold environment (from -28°C (-18°F)) |
| External charger - 2.4kW AC - Lithium-ion - Single-phase |
| Key switch entry |
| Soft polyurethane drive wheel - 75 shore |

**Head Office**
B.P. 249 - 430 rue de l'Aubinière
44150 Ancenis Cedex - France
Tel: +33 (0)2 40 09 10 11 - Fax: +33 (0)2 40 09 10 97
www.manitou.com

This publication provides a description of the configuration versions and options for Manitou products, which may differ for equipment. The equipment presented in this brochure may be part of a series, as an option, or it may not be available, depending on the versions. Manitou reserves the right, at any time and without notice, to amend the specifications described and represented. The specifications provided do not bind the manufacturer. For more details, please contact your Manitou agent. This is not a contractually binding document. The presentation of the products is not contractually binding. List of specifications non-exhaustive. The logos as well as the visual identity of the company are owned by Manitou and cannot be used without authorisation. All rights reserved. The photos and diagrams contained in this brochure are only provided for consultation and information purposes.
MANITOU BF SA - Limited company with board of directors - Share capital: 39,668,399 euros - 857 802 508 RCS Nantes