Technical sheet :

ES 112 EASY

MANITOU
HANDLING YOUR WORLD

	Technical characteristics		Metric
1.1	Manufacturer		MANITOU
1.2	Model Name		ES 112 Easy
1.3	Power source		Electrical - Lithium
1.4	Operator type		Pedestrian
1.5	Max. capacity	Q	1200 kg
1.6	Load center of gravity	c	600 mm
1.8	Distance from Load backrest to center of rear axle	x	798 mm
1.9	Wheelbase	y	1198 mm
	Weight		
2.1	Service weight		610 kg
2.2	Weight on front axle (laden) / rear axle (laden)		645 kg / 1165 kg
2.3	Weight on front axle (Unladen) / rear axle (Unladen)		448 kg / 162 kg
	Wheels		
3.1	Tires type		Polyurethane
3.3	Number of load wheels / Size of load wheels		4 / 80x64
3.4	Number of stabilizer wheels / Size of the stabilizer wheels		1 / 80 x 64
3.5	Number of front wheels / rear wheels		2 / 4
3.5.2	Number of drive wheels / Size of drive wheels		1/210x70
3.6	Front wheel gauge	b10	566 mm
3.7	Rear wheel gauge	b11	396 mm
	Dimensions		
4.15	Fork height in low position	h13	85 mm
4.19	Overall length	l1	1700 mm
4.20	Length to face of forks	l2	560 mm
4.21	Overall width	b1	800 mm
4.22	Forks section / width / length	s / e / l	60 mm / 170 mm / 1150 mm
4.24	Fork carriage width	b3	680 mm
4.25	Forks spread	b5	560 mm
4.31	Ground clearance below mast	m1	26 mm
4.32	Ground clearance at centre of wheelbase	m2	26 mm
4.33	Aisle Width for pallets 1000 x 1200 crossways	Ast	2226 mm
4.34	Aisle width for 800 x 1200 pallet lengthways	Ast	2169 mm
4.35	Turning radius	Wa	1402 mm
	Performances		
5.1	Travel speed (laden / unladen)		4.50 km/h / 5 km/h
5.2	Lifting speed (laden / unladen)		0.11 m/s / 0.15 m/s
5.3	Lowering speed (laden / unladen)		0.12 m/s / 0.12 m/s
5.8	Max Gradeability (laden / unladen)		6 % / 10 %
5.10	Service brake		Electro magnetic
	Engine		
6.1	Drive motor rating S2 60 min		0.65 kW
6.2	Lift motor rating at S3 15%		2.20 kW
6.4	Battery voltage / capacity		24 V / 60 Ah
	Battery technology		Lithium-ion
6.5	Battery weight (+/- 5%)		18 kg
	Miscellaneous		
8.1	Type of drive control		DC
8.4	Sound level at the driver's ear according to DIN 12 053		65 dB

ES 112 Easy - Dimensional drawing

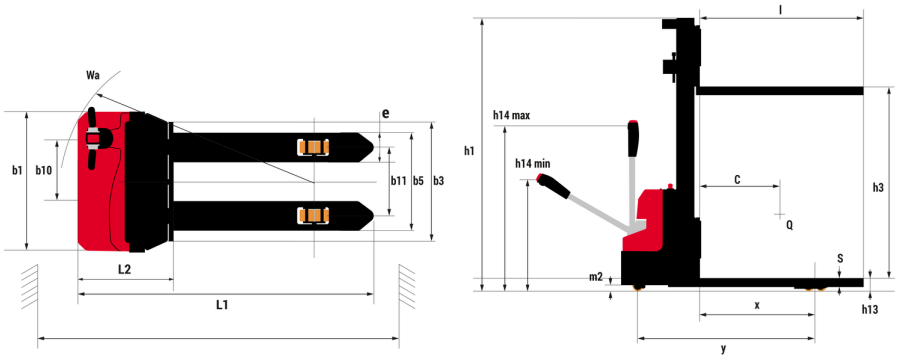

Characteristics of masts and residual capacities

Central Cylinder Duplex (CCD)		CCD 27	CCD 36
h1 - Mast lowered height	mm	1924	2458
h3 - Mast lifting height	mm		3600
h4 - Mast extended height	mm	3274	4258
Residual capacity at max height	kg	1000	600
Height at max capacity	mm	2500	2500

Central Cylinder Simplex (CCS)		CCS 11	CCS 15
h1 - Mast lowered height	mm	1716	1992
h2 - Mast free lift	mm	1100	1475
h3 - Mast lifting height	mm	1100	1500
h4 - Mast extended height	mm	1716	2015
Residual capacity at max height	kg	1200	1200
Height at max capacity	mm	1100	1500

Head Office
B.P. 249 - 430 rue de l'Aubinière
44150 Ancenis Cedex - France
Tel: +33 (0)2 40 09 10 11 - Fax: +33 (0)2 40 09 10 97
www.manitou.com

This publication provides a description of the configuration versions and options for Manitou products, which may differ for equipment. The equipment presented in this brochure may be part of a series, as an option, or it may not be available, depending on the versions. Manitou reserves the right, at any time and without notice, to amend the specifications described and represented. The specifications provided do not bind the manufacturer. For more details, please contact your Manitou agent. This is not a contractually binding document. The presentation of the products is not contractually binding. List of specifications non-exhaustive. The logos as well as the visual identity of the company are owned by Manitou and cannot be used without authorisation. All rights reserved. The photos and diagrams contained in this brochure are only provided for consultation and information purposes.
MANITOU BF SA - Limited company with board of directors - Share capital: 39,668,399 euros - 857 802 508 RCS Nantes