Technical sheet :

150 AETJ-C

Capacities		Metric
Working height	h21	14.60 m
Platform height	h7	12.60 m
Max. outreach		7.13 m
Overhang		7.07 m
Pendular arm rotation (top / bottom)		+65 ° / -65 °
Platform capacity	Q	220 kg
Turret rotation		355 °
Platform rotation (right / left)		66 ° / 59 °
Number of people (indoor / outdoor)		2 / 2
Weight and dimensions		
Platform weight*		6975 kg
Platform dimensions (length x width)	lp / ep	1.20 m x 0.92 m
Floor height (access)	h20	0.40 m
Overall length	l1	6.05 m
Overall width	b1	1.50 m
Overall height	h17	1.97 m
Overall length (stowed)	l9	4.40 m
Overall height (stowed)	h18 ***	2.08 m
Jib length	l13	1.26 m
Counterweight offset (turret at 90Â°)	a7	0.12 m
External turning radius	Wa3	3.96 m
Ground clearance at centre of wheelbase	m2	0.14 m
Wheelbase	y	2 m
Performances		
Drive speed - stowed		5 km/h
Drive speed - raised		0.60 km/h
Gradeability		22 %
Permissible leveling		3 °
Wheels		
Tires type		Solid non-marking tires
Standard tires		24 x 7.5 in / 600 x 190 mm
Drive wheels (front / rear)		0 / 2
Steering wheels (front / rear)		2 / 0
Braking wheels (front / rear)		0 / 2
Engine/Battery		
Electric engine power rating		2 x 3 kW
Lift motor power		3.70 kW
Battery nominal voltage / capacity		48 V / 240 Ah
Battery energy		11 kWh
On-board charger (V / A)		48 V / 30 A
Miscellaneous		
Number of cycles with STD Battery (HIRD)		46
Ground Pressure		13.50 dan/cm2
Hydraulic Pressure		210 bar
Hydraulic tank capacity		15 l
Noise to environment (LwA)		< 70 dB
Vibration on hands/arms		< 0.52 m/s²
Standards compliance		
This machine is in compliance with:		European directives: 2006/42/EC- Machinery (revised EN280-1:2022) - 2004/108/EC (EMC) - 2006/95/EC (Low voltage)

*Varies according to options and standards of the country to which the machine is delivered

150 AETJ-C - Load chart

Load Chart metric

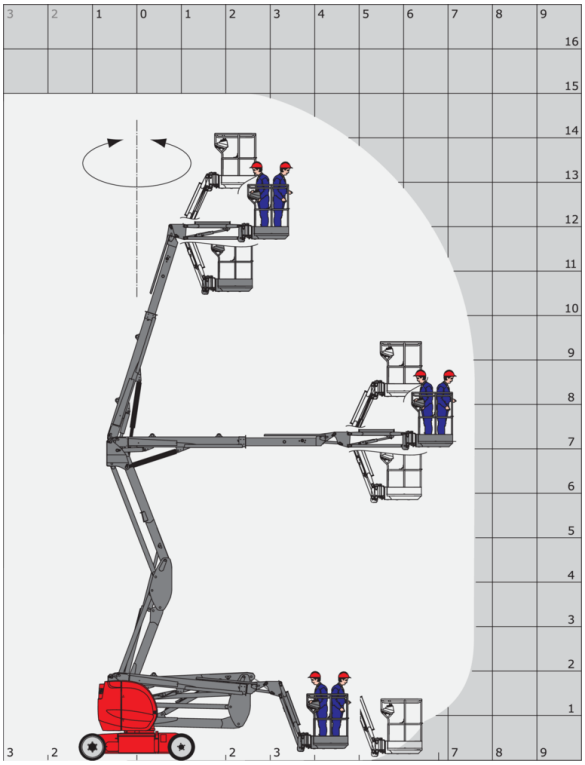

150 AETJ-C - Dimensional drawing

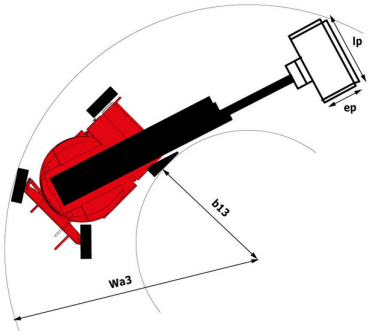

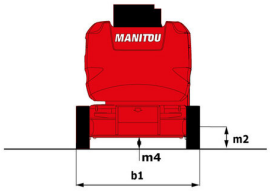

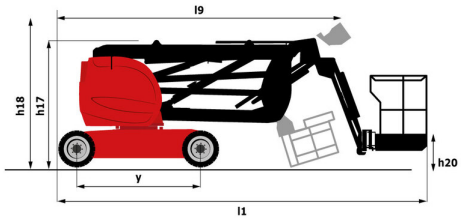

Equipment

Standard
230V Predisposition
Audible alarm and illuminated indicator lamp (leveling, overload, lowering)
CAN bus technology
Easy Link with 2 year Service
Emergency stop button in platform and on frame
Horn in the platform
Manual emergency lowering
Multi-function smartview display
Multi-voltage integrated charger
Negative-type braking on rear wheels
Non-marking rubber tyres
Pendular arm
Platform with open-work floor
Proportional controls
Secondary Protection System (SPS)
Slinging and securing rings
Tool box in platform
Traction battery
Travel possible at maximum height

Optional
110 or 230V plug with differential circuit breaker
Audio warning on all motion
Audio warning on movement
Biodegradable hydraulic oil - Grade 32
Centralized filling of the battery
Cold weather protection oil
Easy Link - With access control keypad
Easy link with remote lock
External pneumatic supply source
High capacity starting battery
Maintenance-free battery
Non-marking Foam Inflated Tires 914 x 381 mm / 36x15D610
Personalized paintwork
Protective cover for control panel
Rail protection
Safety kit - Harness + helmet
Turret orientation information
Water predisposition
Working light (x1) on basket

MANITOU
HANDLING YOUR WORLD

Head Office
B.P. 249 - 430 rue de l'Aubinière
44150 Ancenis Cedex - France
Tel: +33 (0)2 40 09 10 11 - Fax: +33 (0)2 40 09 10 97
www.manitou.com

This publication provides a description of the configuration versions and options for Manitou products, which may differ for equipment. The equipment presented in this brochure may be part of a series, as an option, or it may not be available, depending on the versions. Manitou reserves the right, at any time and without notice, to amend the specifications described and represented. The specifications provided do not bind the manufacturer. For more details, please contact your Manitou agent. This is not a contractually binding document. The presentation of the products is not contractually binding. List of specifications non-exhaustive. The logos as well as the visual identity of the company are owned by Manitou and cannot be used without authorisation. All rights reserved. The photos and diagrams contained in this brochure are only provided for consultation and information purposes.
MANITOU BF SA - Limited company with board of directors - Share capital: 39,668,399 euros - 857 802 508 RCS Nantes