Technical sheet :

ES 412 LE

MANITOU
HANDLING YOUR WORLD

	Technical characteristics		Metric
1.1	Manufacturer		Manitou
1.2	Model Name		ES 412 LE
1.3	Power source		Electrical
1.4	Operator type		Pedestrian
1.5	Max. capacity	Q	1200 kg
1.6	Load center of gravity	c	600 mm
1.8	Distance from Load backrest to center of rear axle	x	683 mm
1.9	Wheelbase	y	1245 mm
	Weight		
2.1	Service weight		924 kg
2.2	Weight on front axle (laden) / rear axle (laden)		743 kg / 1381 kg
2.3	Weight on front axle (Unladen) / rear axle (Unladen)		612 kg / 262 kg
	Wheels		
3.1	Tires type		Polyurethane
3.3	Number of load wheels / Size of load wheels		2 / 82x70
3.4	Number of castor wheels / Size of castor wheels		1 / 1
3.4	Number of stabilizer wheels / Size of the stabilizer wheels		2 / 125x50
3.5	Number of front wheels / rear wheels		2 / 2
3.5.2	Number of drive wheels / Size of drive wheels		1/230x75
3.6	Front wheel gauge	b10	517 mm
3.7	Rear wheel gauge	b11	978 mm
	Dimensions		
4.15	Fork height in low position	h13	85 mm
4.19	Overall length	l1	1870 mm
4.20	Length to face of forks	l2	720 mm
4.21	Overall width	b1	1106 mm
4.22	Forks section / width / length	s / e / l	60 mm / 180 mm / 1150 mm
4.24	Fork carriage width	b3	680 mm
4.31	Ground clearance below mast	m1	35 mm
4.32	Ground clearance at centre of wheelbase	m2	20 mm
4.9	Height tiller max.	h14	1050 mm
	Performances		
5.1	Travel speed (laden / unladen)		6 km/h / 6 km/h
5.2	Lifting speed (laden / unladen)		0.12 m/s / 0.24 m/s
5.3	Lowering speed (laden / unladen)		0.30 m/s / 0.20 m/s
5.8	Max Gradeability (laden / unladen)		8 % / 10 %
5.10	Service brake		Electro magnetic
	Engine		
6.1	Drive motor rating S2 60 min		1.20 kW
6.2	Lift motor rating at S3 15%		3 kW
6.3	Battery according to DIN 43531/35/36 A, B, C		DIN 43535-B
6.4	Battery voltage / capacity		24 V / 180 Ah
6.5	Battery weight (+/- 5%)		176 kg
	Miscellaneous		
8.1	Type of drive control		AC
8.4	Sound level at the driver's ear according to DIN 12 053		65 dB

ES 412 LE - Dimensional drawing

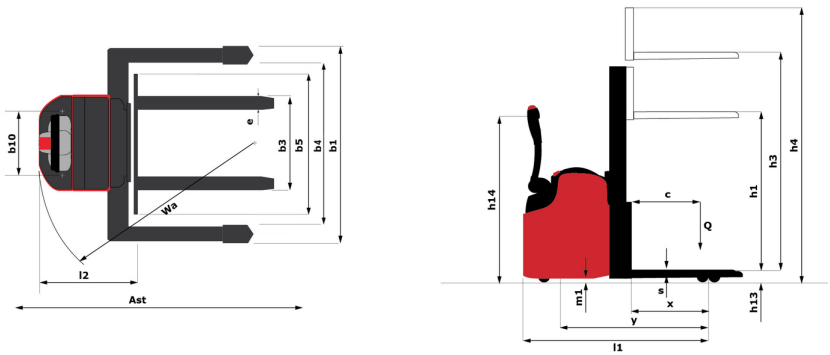

Characteristics of masts and residual capacities

Full Visibility Duplex (FVD)		FVD 29	FVD 34	FVD 38
h1 - Mast lowered height	mm	1940	2190	2390
h3 - Mast lifting height	mm	2940	3440	3840
h4 - Mast extended height	mm	3365	3865	4265
Residual capacity at max height	kg	1200	1200	1200

Free Lift Duplex (FLD)		FLD 29	FLD 34
h1 - Mast lowered height	mm	1940	2190
h2 - Mast free lift	mm	1510	1760
h3 - Mast lifting height	mm	2935	3435
h4 - Mast extended height	mm	3365	3865
Residual capacity at max height	kg	1200	1200
Height at max capacity	mm	2935	3435

Free Lift Triplex (FLT)		FLT 42
h1 - Mast lowered height	mm	1960
h2 - Mast free lift	mm	1470
h3 - Mast lifting height	mm	4240
h4 - Mast extended height	mm	4730
Residual capacity at max height	kg	1200
Height at max capacity	mm	4240

MANITOU
HANDLING YOUR WORLD

Head Office
B.P. 249 - 430 rue de l'Aubinière
44150 Ancenis Cedex - France
Tel: +33 (0)2 40 09 10 11 - Fax: +33 (0)2 40 09 10 97
www.manitou.com

This publication provides a description of the configuration versions and options for Manitou products, which may differ for equipment. The equipment presented in this brochure may be part of a series, as an option, or it may not be available, depending on the versions. Manitou reserves the right, at any time and without notice, to amend the specifications described and represented. The specifications provided do not bind the manufacturer. For more details, please contact your Manitou agent. This is not a contractually binding document. The presentation of the products is not contractually binding. List of specifications non-exhaustive. The logos as well as the visual identity of the company are owned by Manitou and cannot be used without authorisation. All rights reserved. The photos and diagrams contained in this brochure are only provided for consultation and information purposes.
MANITOU BF SA - Limited company with board of directors - Share capital: 39,668,399 euros - 857 802 508 RCS Nantes