Technical sheet :

ES 414

MANITOU
HANDLING YOUR WORLD

	Technical characteristics		Metric
1.1	Manufacturer		Manitou
1.2	Model Name		ES 414
1.3	Power source		Electrical
1.4	Operator type		Pedestrian
1.5	Max. capacity	Q	1400 kg
1.6	Load center of gravity	c	600 mm
1.8	Distance from Load backrest to center of rear axle	x	723 mm
1.9	Wheelbase	y	1285 mm
	Weight		
2.1	Service weight		911 kg
2.2	Weight on front axle (laden) / rear axle (laden)		808 kg / 1505 kg
2.3	Weight on front axle (Unladen) / rear axle (Unladen)		638 kg / 273 kg
	Wheels		
3.1	Tires type		Polyurethane
3.3	Number of load wheels / Size of load wheels		2 / 82x70
3.4	Number of castor wheels		1
3.4	Number of stabilizer wheels / Size of the stabilizer wheels		2 / 125x50
3.5	Number of front wheels / rear wheels		2 / 2
3.5.2	Number of drive wheels / Size of drive wheels		1/230x75
3.6	Front wheel gauge	b10	517 mm
3.7	Rear wheel gauge	b11	380 mm
	Dimensions		
4.15	Fork height in low position	h13	85 mm
4.19	Overall length	l1	1870 mm
4.20	Length to face of forks	l2	720 mm
4.21	Overall width	b1	800 mm
4.22	Forks section / width / length	s / e / l	60 mm / 180 mm / 1150 mm
4.24	Fork carriage width	b3	680 mm
4.31	Ground clearance below mast	m1	35 mm
4.32	Ground clearance at centre of wheelbase	m2	20 mm
4.33	Aisle Width for pallets 1000 x 1200 crossways	Ast	2200 mm
4.35	Turning radius	Wa	1400 mm
4.9	Height tiller max.	h14	1050 mm
	Performances		
5.1	Travel speed (laden / unladen)		6 km/h / 6 km/h
5.2	Lifting speed (laden / unladen)		0.10 m/s / 0.24 m/s
5.3	Lowering speed (laden / unladen)		0.30 m/s / 0.20 m/s
5.8	Max Gradeability (laden / unladen)		8 % / 10 %
5.10	Service brake		Electro magnetic
	Engine		
6.1	Drive motor rating S2 60 min		1.20 kW
6.2	Lift motor rating at S3 15%		3 kW
6.3	Battery according to DIN 43531/35/36 A, B, C		DIN 43535-B
6.4	Battery voltage / capacity		24 V / 250 Ah
6.5	Battery weight (+/- 5%)		213 kg
	Miscellaneous		
8.1	Type of drive control		AC
8.4	Sound level at the driver's ear according to DIN 12 053		65 dB

ES 414 - Dimensional drawing

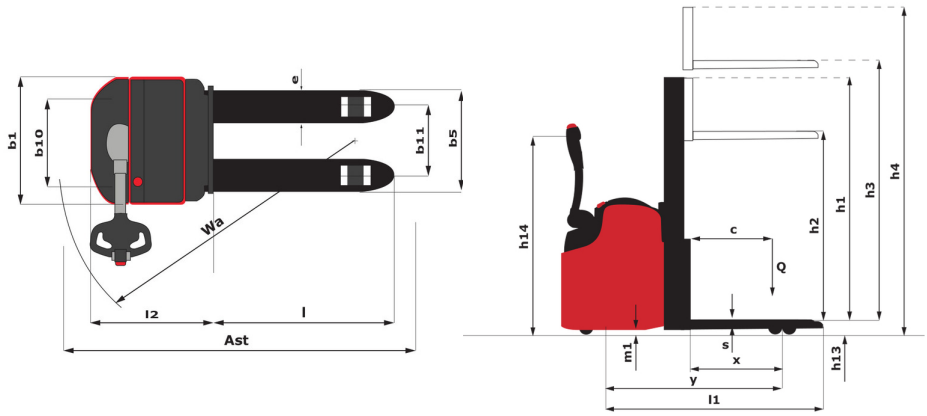

Characteristics of masts and residual capacities

Full Visibility Duplex (FVD)		FVD 29	FVD 34	FVD 38
h1 - Mast lowered height	mm	1940	2190	2390
h3 - Mast lifting height	mm	2940	3440	3840
h4 - Mast extended height	mm	3365	3865	4265
Residual capacity at max height	kg	1250	1050	850
Height at max capacity	mm	2700	2700	2700

Free Lift Duplex (FLD)		FLD 29	FLD 34
h1 - Mast lowered height	mm	1940	2190
h2 - Mast free lift	mm	1420	1670
h3 - Mast lifting height	mm	2935	3435
h4 - Mast extended height	mm	3365	3865
Residual capacity at max height	kg	1250	1000
Height at max capacity	mm	2700	2700

Free Lift Triplex (FLT)		FLT 42
h1 - Mast lowered height	mm	1890
h2 - Mast free lift	mm	1380
h3 - Mast lifting height	mm	4240
h4 - Mast extended height	mm	4678
Residual capacity at max height	kg	700
Height at max capacity	mm	2700

MANITOU
HANDLING YOUR WORLD

Head Office
B.P. 249 - 430 rue de l'Aubinière
44150 Ancenis Cedex - France
Tel: +33 (0)2 40 09 10 11 - Fax: +33 (0)2 40 09 10 97
www.manitou.com

This publication provides a description of the configuration versions and options for Manitou products, which may differ for equipment. The equipment presented in this brochure may be part of a series, as an option, or it may not be available, depending on the versions. Manitou reserves the right, at any time and without notice, to amend the specifications described and represented. The specifications provided do not bind the manufacturer. For more details, please contact your Manitou agent. This is not a contractually binding document. The presentation of the products is not contractually binding. List of specifications non-exhaustive. The logos as well as the visual identity of the company are owned by Manitou and cannot be used without authorisation. All rights reserved. The photos and diagrams contained in this brochure are only provided for consultation and information purposes.
MANITOU BF SA - Limited company with board of directors - Share capital: 39,668,399 euros - 857 802 508 RCS Nantes