Technical sheet :

ES 720

MANITOU
HANDLING YOUR WORLD

	Technical characteristics		Metric
1.1	Manufacturer		Manitou
1.2	Model Name		ES 720
1.3	Power source		Electrical
1.4	Operator type		Pedestrian
1.5	Max. capacity	Q	2000 kg
1.6	Load center of gravity	c	600 mm
1.8	Distance from Load backrest to center of rear axle	x	665 mm
1.9	Wheelbase	y	1104 mm
	Weight		
2.1	Service weight		1420 kg
	Wheels		
3.1	Tires type		Polyurethane
3.3	Number of load wheels / Size of load wheels		2 / 125 x 50
3.4	Number of castor wheels		1
3.4	Number of stabilizer wheels / Size of the stabilizer wheels		2 / 254 x 50
3.5	Number of front wheels / rear wheels		3 / 4
3.5.2	Number of drive wheels / Size of drive wheels		1/254 x 50
3.6	Front wheel gauge	b10	878 mm
3.7	Rear wheel gauge	b11	395 mm
	Dimensions		
4.15	Fork height in low position	h13	90 mm
4.19	Overall length	l1	1911 mm
4.20	Length to face of forks	l2	761 mm
4.21	Overall width	b1	1080 mm
4.22	Forks section / width / length	s / e / l	70 mm / 185 mm / 1150 mm
4.24	Fork carriage width	b3	752 mm
4.31	Ground clearance below mast	m1	30 mm
4.32	Ground clearance at centre of wheelbase	m2	30 mm
4.33	Aisle Width for pallets 1000 x 1200 crossways	Ast	2335 mm
4.34	Aisle Width for pallets 800 x 1200 crossways	Ast	2336 mm
4.35	Turning radius	Wa	1468 mm
4.9	Height tiller min. / max.	h14 / h14	1030 mm / 1490 mm
	Performances		
5.1	Travel speed (laden / unladen)		6 km/h / 6 km/h
5.2	Lifting speed (laden / unladen)		0.11 m/s / 0.20 m/s
5.3	Lowering speed (laden / unladen)		0.22 m/s / 0.21 m/s
5.8	Max Gradeability (laden / unladen)		5 % / 8 %
5.10	Service brake		Electro magnetic
	Engine		
6.1	Drive motor rating S2 60 min		2 kW
6.2	Lift motor rating at S3 15%		4 kW
6.3	Battery according to DIN 43531/35/36 A, B, C		DIN 43535-B
6.4	Battery voltage / capacity		24 V / 250 Ah
6.5	Battery weight (+/- 5%)		250 kg
	Miscellaneous		
8.1	Type of drive control		AC
8.4	Sound level at the driver's ear according to DIN 12 053		70 dB

ES 720 - Dimensional drawing

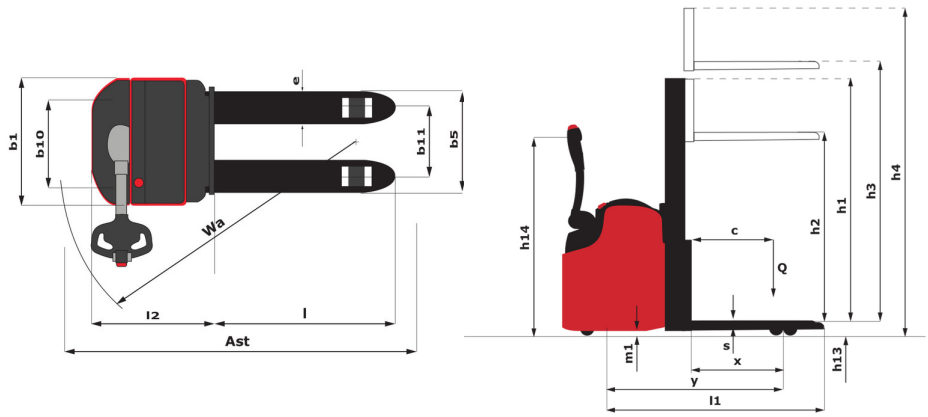

Characteristics of masts and residual capacities

Central Cylinder Simplex (CCS)		CCS 15	CCS 17
h1 - Mast lowered height	mm	1945	2195
h2 - Mast free lift	mm	1420	1670
h3 - Mast lifting height	mm	1500	1700
h4 - Mast extended height	mm	1965	2215
Residual capacity at max height	kg	2000	2000
Height at max capacity	mm	1510	1760

Full Visibility Duplex (FVD)		FVD 29	FVD 34	FVD 38
h1 - Mast lowered height	mm	1945	2195	2395
h3 - Mast lifting height	mm	2900	3400	3800
h4 - Mast extended height	mm	3400	3900	4300
Residual capacity at max height	kg	2000	1800	1600
Height at max capacity	mm	2940	2900	2900

Free Lift Duplex (FLD)		FLD 29	FLD 34
h1 - Mast lowered height	mm	1945	2195
h2 - Mast free lift	mm	1420	1670
h3 - Mast lifting height	mm	2900	3400
h4 - Mast extended height	mm	3400	3900
Residual capacity at max height	kg	2000	1700
Height at max capacity	mm	2930	2900

Free Lift Triplex (FLT)		FLT 42	FLT 47	FLT 54
h1 - Mast lowered height	mm	1900	2065	2305
h2 - Mast free lift	mm	1380	1540	1790
h3 - Mast lifting height	mm	4200	4700	5400
h4 - Mast extended height	mm	4720	5200	5930
Residual capacity at max height	kg	1300	1000	700
Height at max capacity	mm	2900	2900	2900

Head Office
B.P. 249 - 430 rue de l'Aubinière
44150 Ancenis Cedex - France
Tel: +33 (0)2 40 09 10 11 - Fax: +33 (0)2 40 09 10 97
www.manitou.com

This publication provides a description of the configuration versions and options for Manitou products, which may differ for equipment. The equipment presented in this brochure may be part of a series, as an option, or it may not be available, depending on the versions. Manitou reserves the right, at any time and without notice, to amend the specifications described and represented. The specifications provided do not bind the manufacturer. For more details, please contact your Manitou agent. This is not a contractually binding document. The presentation of the products is not contractually binding. List of specifications non-exhaustive. The logos as well as the visual identity of the company are owned by Manitou and cannot be used without authorisation. All rights reserved. The photos and diagrams contained in this brochure are only provided for consultation and information purposes.
MANITOU BF SA - Limited company with board of directors - Share capital: 39,668,399 euros - 857 802 508 RCS Nantes