Technical sheet :

ES 725

MANITOU
HANDLING YOUR WORLD

	Technical characteristics		Metric
1.1	Manufacturer		Manitou
1.2	Model Name		ES 725
1.3	Power source		Electrical
1.4	Operator type		Pedestrian
1.5	Max. capacity	Q	2500 kg
1.6	Load center of gravity	c	600 mm
1.8	Distance from Load backrest to center of rear axle	x	655 mm
1.9	Wheelbase	y	1104 mm
	Weight		
2.1	Service weight		1675 kg
	Wheels		
3.1	Tires type		Polyurethane
3.3	Number of load wheels / Size of load wheels		4 / 125 x 50
3.4	Number of castor wheels		1
3.4	Number of stabilizer wheels / Size of the stabilizer wheels		2 / 254 x 50
3.5	Number of front wheels / rear wheels		3 / 4
3.5.2	Number of drive wheels / Size of drive wheels		1/254 x 100
3.6	Front wheel gauge	b10	878 mm
3.7	Rear wheel gauge	b11	370 mm
	Dimensions		
4.15	Fork height in low position	h13	90 mm
4.19	Overall length	l1	1920 mm
4.20	Length to face of forks	l2	771 mm
4.21	Overall width	b1	1080 mm
4.22	Forks section / width / length	s / e / l	90 mm / 190 mm / 1150 mm
4.24	Fork carriage width	b3	800 mm
4.31	Ground clearance below mast	m1	22 mm
4.32	Ground clearance at centre of wheelbase	m2	22 mm
4.33	Aisle Width for pallets 1000 x 1200 crossways	Ast	2390 mm
4.34	Aisle Width for pallets 800 x 1200 crossways	Ast	2487 mm
4.35	Turning radius	Wa	1468 mm
4.9	Height tiller min. / max.	h14 / h14	1030 mm / 1490 mm
	Performances		
5.1	Travel speed (laden / unladen)		6 km/h / 6 km/h
5.2	Lifting speed (laden / unladen)		0.08 m/s / 0.15 m/s
5.3	Lowering speed (laden / unladen)		0.22 m/s / 0.21 m/s
5.8	Max Gradeability (laden / unladen)		5 % / 8 %
5.10	Service brake		Electro magnetic
	Engine		
6.1	Drive motor rating S2 60 min		2 kW
6.2	Lift motor rating at S3 15%		4 kW
6.3	Battery according to DIN 43531/35/36 A, B, C		DIN 43535-B
6.4	Battery voltage / capacity		24 V / 250 Ah
6.5	Battery weight (+/- 5%)		276 kg
	Miscellaneous		
8.1	Type of drive control		AC
8.4	Sound level at the driver's ear according to DIN 12 053		70 dB

ES 725 - Dimensional drawing

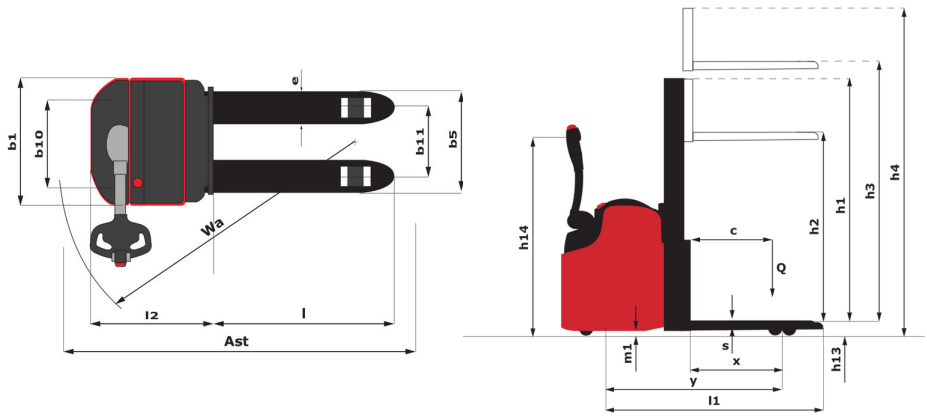

Characteristics of masts and residual capacities

Visibilité totale Simplex (FVS)		FVS 14
h1 - Mast lowered height	mm	1930
h2 - Mast free lift	mm	1490
h3 - Mast lifting height	mm	1490
h4 - Mast extended height	mm	1930
Residual capacity at max height	kg	2500
Height at max capacity	mm	1490

Full Visibility Duplex (FVD)		FVD 27
h1 - Mast lowered height	mm	1900
h2 - Mast free lift	mm	77
h3 - Mast lifting height	mm	2700
h4 - Mast extended height	mm	3240
Residual capacity at max height	kg	2500
Height at max capacity	mm	2760

MANITOU
HANDLING YOUR WORLD

Head Office
B.P. 249 - 430 rue de l'Aubinière
44150 Ancenis Cedex - France
Tel: +33 (0)2 40 09 10 11 - Fax: +33 (0)2 40 09 10 97
www.manitou.com

This publication provides a description of the configuration versions and options for Manitou products, which may differ for equipment. The equipment presented in this brochure may be part of a series, as an option, or it may not be available, depending on the versions. Manitou reserves the right, at any time and without notice, to amend the specifications described and represented. The specifications provided do not bind the manufacturer. For more details, please contact your Manitou agent. This is not a contractually binding document. The presentation of the products is not contractually binding. List of specifications non-exhaustive. The logos as well as the visual identity of the company are owned by Manitou and cannot be used without authorisation. All rights reserved. The photos and diagrams contained in this brochure are only provided for consultation and information purposes.
MANITOU BF SA - Limited company with board of directors - Share capital: 39,668,399 euros - 857 802 508 RCS Nantes