Technical sheet :

ES 820 LI

MANITOU
HANDLING YOUR WORLD

	Technical characteristics		Metric
1.1	Manufacturer		Manitou
1.2	Model Name		ES 820 LI
1.3	Power source		Electrical
1.4	Operator type		Pedestrian
1.5	Max. capacity	Q	2000 kg
1.51	Nominal capacity on wrapover forks	Q	2000 kg
1.6	Load center of gravity	c	600 mm
1.8	Distance from Load backrest to center of rear axle	x	674 mm
1.9	Wheelbase	y	1467 mm
	Weight		
2.1	Service weight		1800 kg
2.2	Weight on front axle (laden) / rear axle (laden)		1360 kg / 2500 kg
2.3	Weight on front axle (Unladen) / rear axle (Unladen)		1250 kg / 550 kg
	Wheels		
3.1	Tires type		Bandage
3.3	Number of load wheels / Size of load wheels		2 / 82x68
3.4	Number of castor wheels		1
3.4	Number of stabilizer wheels / Size of the stabilizer wheels		2 / 120x50
3.5	Number of front wheels / rear wheels		1 / 2
3.5.2	Number of drive wheels / Size of drive wheels		1/254x100
3.6	Front wheel gauge	b10	664 mm
3.7	Rear wheel gauge	b11	375 mm
	Dimensions		
4.15	Fork height in low position	h13	85 mm
4.19	Overall length	l1	2123 mm
4.20	Length to face of forks	l2	700 mm
4.21	Overall width	b1	890 mm
4.22	Forks section / width / length	s / e / l	70 mm / 200 mm / 1150 mm
4.24	Fork carriage width	b3	700 mm
4.31	Ground clearance below mast	m1	20 mm
4.32	Ground clearance at centre of wheelbase	m2	21 mm
4.33	Aisle Width for pallets 1000 x 1200 crossways	Ast	2660 mm
4.35	Turning radius	Wa	1719 mm
4.9	Height tiller min. / max.	h14 / h14	975 mm / 1375 mm
	Performances		
5.1	Travel speed (laden / unladen)		6 km/h / 6 km/h
5.2	Lifting speed (laden / unladen)		0.11 m/s / 0.20 m/s
5.3	Lowering speed (laden / unladen)		0.22 m/s / 0.21 m/s
5.8	Max Gradeability (laden / unladen)		6 % / 10 %
5.10	Service brake		Electro magnetic
	Engine		
6.1	Drive motor rating S2 60 min		2 kW
6.2	Lift motor rating at S3 15%		4 kW
6.3	Battery according to DIN 43531/35/36 A, B, C		Traction
6.4	Battery voltage / capacity		24 V / 315 Ah
6.5	Battery weight (+/- 5%)		275 kg
	Miscellaneous		
8.1	Type of drive control		DC
8.4	Sound level at the driver's ear according to DIN 12 053		65 dB

ES 820 LI - Dimensional drawing

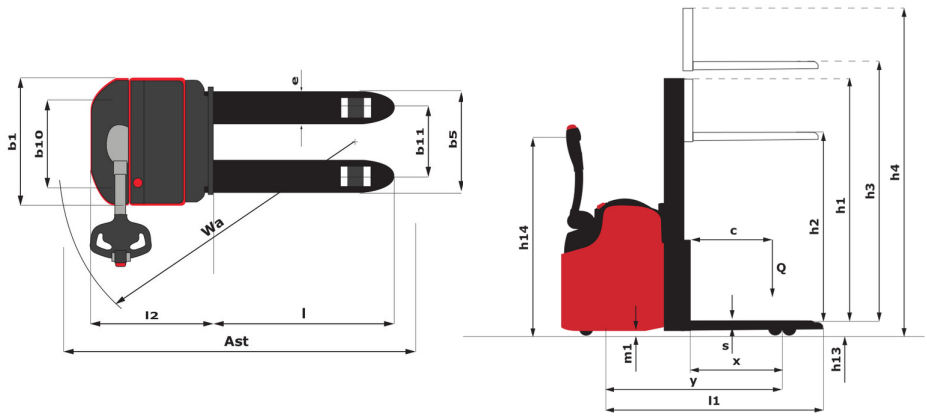

Characteristics of masts and residual capacities

Central Cylinder Simplex (CCS)		CCS 15	CCS 17
h1 - Mast lowered height	mm	1955	2205
h2 - Mast free lift	mm	1510	1760
h3 - Mast lifting height	mm	1510	1760
h4 - Mast extended height	mm	1965	2215
Residual capacity at max height	kg	2000	2000

Full Visibility Duplex (FVD)		FVD 29	FVD 34
h1 - Mast lowered height	mm	1955	2205
h3 - Mast lifting height	mm	2940	3440
h4 - Mast extended height	mm	3400	3900
Residual capacity at max height	kg	1600	1300

Free Lift Duplex (FLD)		FLD 29	FLD 34
h1 - Mast lowered height	mm	2205	2205
h2 - Mast free lift	mm	1510	1760
h3 - Mast lifting height	mm	2935	3435
h4 - Mast extended height	mm	3895	3895
Residual capacity at max height	kg	1600	1300

Free Lift Triplex (FLT)		FLT 42	FLT 47	FLT 54
h1 - Mast lowered height	mm	1915	2075	2315
h2 - Mast free lift	mm	1470	1630	1880
h3 - Mast lifting height	mm	4250	4730	5460
h4 - Mast extended height	mm	4725	5205	5895
Residual capacity at max height	kg	750	550	450

Head Office
B.P. 249 - 430 rue de l'Aubinière
44150 Ancenis Cedex - France
Tel: +33 (0)2 40 09 10 11 - Fax: +33 (0)2 40 09 10 97
www.manitou.com

This publication provides a description of the configuration versions and options for Manitou products, which may differ for equipment. The equipment presented in this brochure may be part of a series, as an option, or it may not be available, depending on the versions. Manitou reserves the right, at any time and without notice, to amend the specifications described and represented. The specifications provided do not bind the manufacturer. For more details, please contact your Manitou agent. This is not a contractually binding document. The presentation of the products is not contractually binding. List of specifications non-exhaustive. The logos as well as the visual identity of the company are owned by Manitou and cannot be used without authorisation. All rights reserved. The photos and diagrams contained in this brochure are only provided for consultation and information purposes.
MANITOU BF SA - Limited company with board of directors - Share capital: 39,668,399 euros - 857 802 508 RCS Nantes