Technical sheet :

# MBL-X 920 92P ST2

Manitou is committed to bringing value to its backhoe loaders by incorporating advanced and robust features for multi-application capabilities. MBL X 920 is powered by Tier -II/III engine. The structure of MBL X 920 is durable and designed for intensive operations. It comes with the latest cabin design and unbreakable bonnet which promises to deliver higher up-time and require low maintenance, even after prolonged usage. Customers get quick returns on their investments on top of an optimum Total Cost of Ownership. It comes with an option of features such as AC, multipurpose bucket.

MANITOU
HANDLING YOUR WORLD

| Capacities | | Metric |
|---|---|---|
| Wheelbase 2 wheels drive | | 2185 mm |
| Wheelbase 4 wheels drive | | 2130 mm |
| **Weight and dimensions** | | |
| Unladen weight | | 7620 kg |
| Unladen weight with 4 WD | | 7620 kg |
| Unladen weight with 4 WD 7 in 1 | | 7908 kg |
| Unladen weight 4WD - Side shift | | 7620 kg |
| Overall length | l1 | 7330 mm |
| Overall width | b1 | 2330 mm |
| Overall width with stabilizers extended - Center mount only | | 3910 mm |
| Cabin height | h6 | 2830 mm |
| Height of cab with air conditioning (option) | h6** | 2860 mm |
| Overall height | h17 | 3790 mm |
| External turning radius over tyres (braked) | Wa1 | 3850 mm |
| External turning radius over tyres (unbraked) | Wa1 | 4200 mm |
| External turning radius over bucket (braked) | Wa5 | 5550 mm |
| External turning radius over bucket (unbraked) | Wa5 | 5700 mm |
| Standard tires front / rear | | 12.5 x 18 - 12 PR / 16.9 x 28-12PR |
| Optional tyre (front / rear) | | 9 x 16 - 16 PR / 14 x 25 - 20 PR |
| Ground clearance | m4 | 280 mm |
| **Performances** | | |
| Travel speed forward 1st / 2nd | | 5.40 km/h / 8.60 km/h |
| Travel speed forward 3rd / 4th | | 19.90 km/h / 40 km/h |
| **Engine** | | |
| Engine brand | | Perkins |
| Engine model | | 1104C 44T Turbo Charged Water Cooled Tier-II |
| Displacement | | 4.40 l |
| Gross Power / Power | | 68.50 kW @ 2200 rpm |
| Max. torque | | 395 Nm |
| Battery voltage / capacity | | 12 V / 75 Ah |
| **Transmission** | | |
| Transmission brand | | Carraro |
| Number of gears (forward / reverse) | | 4 / 4 |
| Torque converter stall ratio | | 3.01:1 |
| Service brake | | Wet disc brakes |
| **Hydraulics** | | |
| Hydraulic flow | | 142 l/min |
| Main relief pressure | | 225 bar |
| **Tank capacities** | | |
| Hydraulic oil | | 90 l |
| Liquid cooling tank volume | | 16 l |
| Fuel tank | | 145 l |
| Transmission oil | | 17.50 l |
| Engine oil | | 9.10 l |
| Oil rear axle | | 17.50 l |
| **Bucket** | | |
| Backhoe standard capacity | | 0.24 m³ |
| Width backhoe bucket | | 892 mm |
| Loader standard capacity | | 1 m³ |
| Width loader bucket | | 2235 mm |
| **Miscellaneous** | | |
| Power steering | | Yes |
| Front steer axle of oscillation 2WD | | 20 ° |
| Steering wheels (front / rear) | | 2 / 2 |

# Performance backhoe

| | Standard dipper |
|---|---|
| p1 - Max dig depth (mm) | 4741 |
| r1 - Max reach ground level to slew center (mm) | 5730 |
| r2 - Max loading reach (mm) | 1996 |
| Max operating height (mm) | 5626 |
| Max loading height (mm) | 3871 |
| p2 - Max straight wall dig depth (mm) | 2602 |
| a10 - Max bucket rotation (°) | 194 |
| Total side shift (mm) | 1198 |
| Dipper tearout (kgF) | 4336 |
| Bucket tearout (kgF) | 5810 |
| Hydraulic lift capacity (kg) | 1460 |

# Performance loader

| | Standard shovel |
|---|---|
| Max dump angle (°) | 51 |
| h26 - Max operating height (loader version) (mm) | 4230 |
| h23 - Max dump height at 45Â° (mm) | 2780 |
| h24 - Max loadover height (mm) | 3310 |
| h25 - Max hinge pin height (mm) | 3570 |
| r3 - Max reach at full height 45Â° (mm) | 710 |
| p3 - Below ground dig depth (mm) | 156 |
| a13 - Rollback at ground (°) | 45 |
| Shovel breakout (kgf) | 5229 |
| Arms breakout (kgF) | 5312 |
| Lifting capacity at full height (kg) | 3819 |

## MBL-X 920 92P ST2 - Dimensional drawing

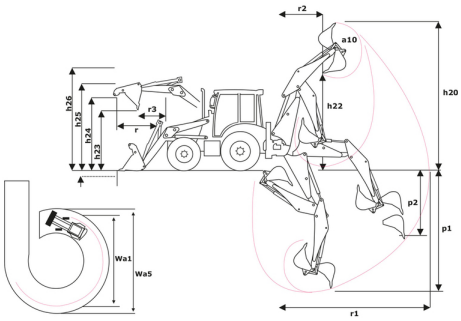


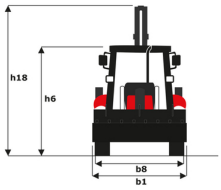


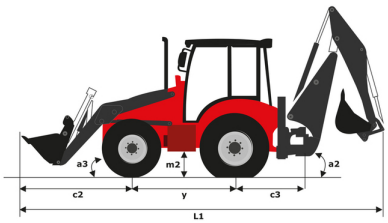

MANITOU
HANDLING YOUR WORLD

**Head Office**
B.P. 249 - 430 rue de l'Aubinière
44150 Ancenis Cedex - France
Tel: +33 (0)2 40 09 10 11 - Fax: +33 (0)2 40 09 10 97
www.manitou.com

This publication provides a description of the configuration versions and options for Manitou products, which may differ for equipment. The equipment presented in this brochure may be part of a series, as an option, or it may not be available, depending on the versions. Manitou reserves the right, at any time and without notice, to amend the specifications described and represented. The specifications provided do not bind the manufacturer. For more details, please contact your Manitou agent. This is not a contractually binding document. The presentation of the products is not contractually binding. List of specifications non-exhaustive. The logos as well as the visual identity of the company are owned by Manitou and cannot be used without authorisation. All rights reserved. The photos and diagrams contained in this brochure are only provided for consultation and information purposes.
MANITOU BF SA - Limited company with board of directors - Share capital: 39,668,399 euros - 857 802 508 RCS Nantes