Technical sheet :

MBL-X 920 92P ST2

Manitou is committed to bringing value to its backhoe loaders by incorporating advanced and robust features for multi-application capabilities. MBL X 920 is powered by Tier -II/III engine. The structure of MBL X 920 is durable and designed for intensive operations. It comes with the latest cabin design and unbreakable bonnet which promises to deliver higher up-time and require low maintenance, even after prolonged usage. Customers get quick returns on their investments on top of an optimum Total Cost of Ownership. It comes with an option of features such as AC, multipurpose bucket.

MANITOU
HANDLING YOUR WORLD

Capacities		Metric
Wheelbase 2 wheels drive		2185 mm
Wheelbase 4 wheels drive		2130 mm
Weight and dimensions		
Unladen weight		7620 kg
Unladen weight with 4 WD		7620 kg
Unladen weight with 4 WD 7 in 1		7908 kg
Unladen weight 4WD - Side shift		7620 kg
Overall length	l1	7330 mm
Overall width	b1	2330 mm
Overall width with stabilizers extended - Center mount only		3910 mm
Cabin height	h6	2830 mm
Height of cab with air conditioning (option)	h6**	2860 mm
Overall height	h17	3790 mm
External turning radius over tyres (braked)	Wa1	3850 mm
External turning radius over tyres (unbraked)	Wa1	4200 mm
External turning radius over bucket (braked)	Wa5	5550 mm
External turning radius over bucket (unbraked)	Wa5	5700 mm
Standard tires front / rear		12.5 x 18 - 12 PR / 16.9 x 28-12PR
Optional tyre (front / rear)		9 x 16 - 16 PR / 14 x 25 - 20 PR
Ground clearance	m4	280 mm
Performances		
Travel speed forward 1st / 2nd		5.40 km/h / 8.60 km/h
Travel speed forward 3rd / 4th		19.90 km/h / 40 km/h
Engine		
Engine brand		Perkins
Engine model		1104C 44T Turbo Charged Water Cooled Tier-II
Displacement		4.40 l
Gross Power / Power		68.50 kW @ 2200 rpm
Max. torque		395 Nm
Battery voltage / capacity		12 V / 75 Ah
Transmission		
Transmission brand		Carraro
Number of gears (forward / reverse)		4 / 4
Torque converter stall ratio		3.01:1
Service brake		Wet disc brakes
Hydraulics		
Hydraulic flow		142 l/min
Main relief pressure		225 bar
Tank capacities		
Hydraulic oil		90 l
Liquid cooling tank volume		16 l
Fuel tank		145 l
Transmission oil		17.50 l
Engine oil		9.10 l
Oil rear axle		17.50 l
Bucket		
Backhoe standard capacity		0.24 m³
Width backhoe bucket		892 mm
Loader standard capacity		1 m³
Width loader bucket		2235 mm
Miscellaneous		
Power steering		Yes
Front steer axle of oscillation 2WD		20 °
Steering wheels (front / rear)		2 / 2

Performance backhoe

	Standard dipper
p1 - Max dig depth (mm)	4741
r1 - Max reach ground level to slew center (mm)	5730
r2 - Max loading reach (mm)	1996
Max operating height (mm)	5626
Max loading height (mm)	3871
p2 - Max straight wall dig depth (mm)	2602
a10 - Max bucket rotation (°)	194
Total side shift (mm)	1198
Dipper tearout (kgF)	4336
Bucket tearout (kgF)	5810
Hydraulic lift capacity (kg)	1460

Performance loader

	Standard shovel
Max dump angle (°)	51
h26 - Max operating height (loader version) (mm)	4230
h23 - Max dump height at 45° (mm)	2780
h24 - Max loadover height (mm)	3310
h25 - Max hinge pin height (mm)	3570
r3 - Max reach at full height 45° (mm)	710
p3 - Below ground dig depth (mm)	156
a13 - Rollback at ground (°)	45
Shovel breakout (kgf)	5229
Arms breakout (kgF)	5312
Lifting capacity at full height (kg)	3819

MBL-X 920 92P ST2 - Dimensional drawing

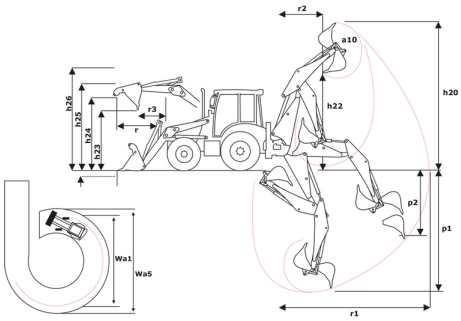

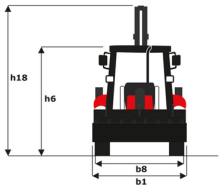

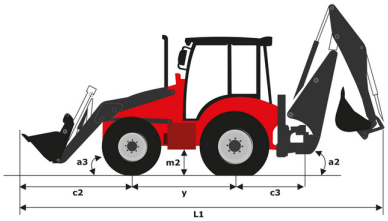

Head Office
B.P. 249 - 430 rue de l'Aubinière
44150 Ancenis Cedex - France
Tel: +33 (0)2 40 09 10 11 - Fax: +33 (0)2 40 09 10 97
www.manitou.com

This publication provides a description of the configuration versions and options for Manitou products, which may differ for equipment. The equipment presented in this brochure may be part of a series, as an option, or it may not be available, depending on the versions. Manitou reserves the right, at any time and without notice, to amend the specifications described and represented. The specifications provided do not bind the manufacturer. For more details, please contact your Manitou agent. This is not a contractually binding document. The presentation of the products is not contractually binding. List of specifications non-exhaustive. The logos as well as the visual identity of the company are owned by Manitou and cannot be used without authorisation. All rights reserved. The photos and diagrams contained in this brochure are only provided for consultation and information purposes.
MANITOU BF SA - Limited company with board of directors - Share capital: 39,668,399 euros - 857 802 508 RCS Nantes