Technical sheet :

MC-X 18-2

MANITOU
HANDLING YOUR WORLD

	Technical characteristics		Metric
1.1	Manufacturer		Manitou
1.2	Model Name		MC-X_18-2
1.3	Power source		Diesel
1.4	Operator type		Seated
1.5	Max. capacity	Q	1800 kg
1.6	Load center of gravity	c	500 mm
1.8	Load distance, centre of drive axle to fork	x	616 mm
1.9	Wheelbase	y	1900 mm
	Weight		
2.1	Service weight		3405 kg
2.2	Weight on front axle (laden) / rear axle (laden)		4200 kg / 1005 kg
2.3	Weight on front axle (Unladen) / rear axle (Unladen)		1625 kg / 1780 kg
	Wheels		
3.1	Tires type		Pneumatic
3.2	Dimensions of front wheels		12.5/80 - 18/12 SL R4
3.3	Dimensions of rear wheels		7.00-12/12 ED PLUS
3.5	Number of front wheels / rear wheels		2 / 2
3.5.2	Number of drive wheels		2
3.6	Front wheel gauge	b10	1159 mm
3.7	Rear wheel gauge	b11	1112 mm
	Dimensions		
4.7	Overall height of low overhead guard (Buggie version)	h6*	1990 mm
4.8	Seat height/stand height	h7	1034 mm
4.19	Overall length	l1	4100 mm
4.20	Length to face of forks	l2	2950 mm
4.21	Overall width	b1	1450 mm
4.22	Forks section x width x length	s / e / l	35 mm x 100 mm / 1150 mm
4.23	Fork carriage ISO 2328 (class/form) A/B		2A
4.24	Fork carriage width	b3	1260 mm
4.31	Ground clearance below mast	m1	300 mm
4.32	Ground clearance at centre of wheelbase	m2	320 mm
4.35	Turning radius	Wa	2585 mm
	Performances		
5.1	Travel speed (laden / unladen)		12 km/h / 24.90 km/h
5.2	Lifting speed (laden / unladen)		0.40 m/s / 0.40 m/s
5.3	Lowering speed (laden / unladen)		0.40 m/s / 0.40 m/s
5.5	Drawbar pull (Laden / Unladen)		1050 daN / 1100 daN
5.7	Gradeability (laden / unladen)		21 % / 34 %
5.10	Service brake		Hydraulic
	Engine		
7.2	Engine power according to ISO 1585		27 kW
7.1	Engine brand / model		Kubota / V1505
7.2	Engine power according to ISO 1585		27 kW
7.3	Rated speed		3000 rpm
7.4	Number of cylinders / Capacity of cylinders		4 - 1498 cm³
	Miscellaneous		
8.1	Type of drive control		Cable
8.2	Working hydraulic pressure for attachments		180 bar
8.3	Oil flow rate for attachments		37 l/min
8.4	Sound level at the driver's ear according to DIN 12 053		79 dB

MC-X 18-2 - Dimensional drawing

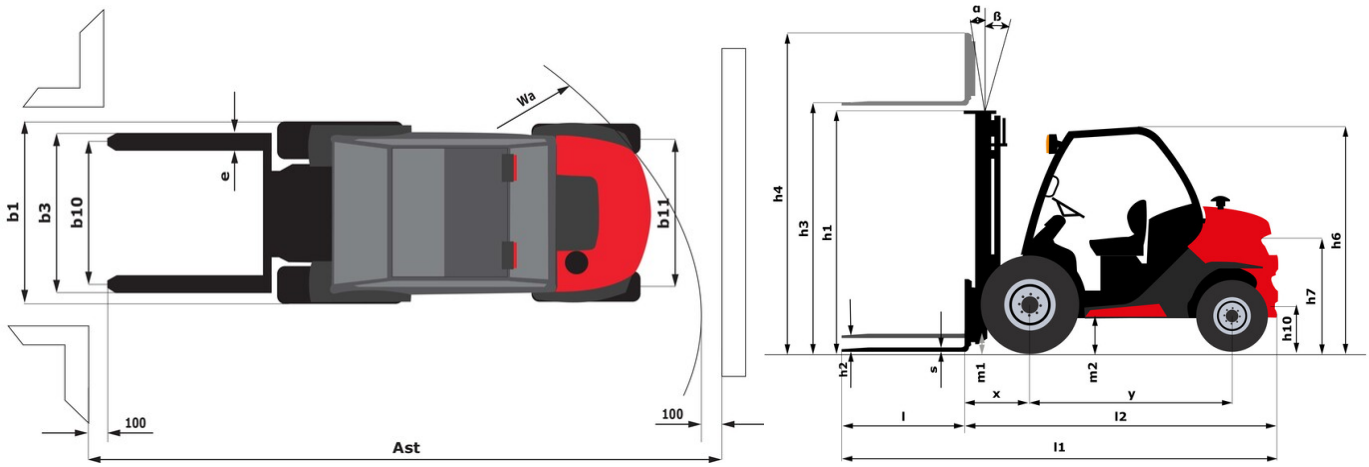

Characteristics of masts and residual capacities

Full Visibility Duplex (FVD)		FVD 33	FVD 37	FVD 40	FVD 45
Mast/fork carriage tilt, forward	°	10	10	10	10
Mast/fork carriage tilt, backward	°	12	12	12	12
h1 - Mast lowered height	mm	2348	2608	2798	3048
h2 - Mast free lift	mm	85	85	85	85
h3 - Mast lifting height	mm	3300	3700	4000	4500
h4 - Mast extended height	mm	4018	4428	4768	5268
Residual capacity at max height	kg	1800			
Height at max capacity	mm	3300	2500	2500	2500

Free Lift Triplex (FLT)		FLT 37	FLT 43	FLT 47	FLT 55
Mast/fork carriage tilt, forward	°	10	10	10	6
Mast/fork carriage tilt, backward	°	12	12	12	6
h1 - Mast lowered height	mm	1998	2198	2348	2608000
h2 - Mast free lift	mm	1305	1505	1655	1915
h3 - Mast lifting height	mm	3700	4300	4700	5500
h4 - Mast extended height	mm	4453	5053	5453	6253
Height at max capacity	mm	2500	2500	2500	2500

Full Visibility Triplex (FVT)		FVT 33
Mast/fork carriage tilt, forward	°	10
Mast/fork carriage tilt, backward	°	12
h1 - Mast lowered height	mm	1888
h2 - Mast free lift	mm	135
h3 - Mast lifting height	mm	3300
h4 - Mast extended height	mm	4048
Height at max capacity	mm	2500

Head Office
B.P. 249 - 430 rue de l'Aubinière
44150 Ancenis Cedex - France
Tel: +33 (0)2 40 09 10 11 - Fax: +33 (0)2 40 09 10 97
www.manitou.com