Technical sheet :

850R

MANITOU
HANDLING YOUR WORLD

Capacities		Metric
Rated Operating Capacity		386 kg
Unladen weight		1352 kg
Weight and dimensions		
Wheelbase	y	775 mm
Overall Operating Height - Fully Raised	h27	3167 mm
Height to Hinge Pin - Fully Raised	h28	2438 mm
Overall Height to top of ROPS	h17	1897 mm
Dump angle at full height	a5	46 °
Dump height	h29	1836 mm
Overall length with bucket	l16	2576 mm
Dump reach - Full height	r6	376 mm
Rollback at ground	a13	23 °
Seat to ground height	h30	879 mm
Overall width less bucket	b1	909 mm
Bucket Width	e1	914 mm
Ground clearance	m4	150 mm
Overall length - Less Bucket	l2	1905 mm
Departure angle	a2	30 °
Clearance Radius - Front with Bucket	b18	1473 mm
Perfomances		
Travel speed (unladen)		8.90 km/h
Wheels		
Standard tires		5.70 x 12
Engine		
Engine brand		Yanmar
Engine model		3TNV82A-BPMSR
Engine norm		Stage V
Gross Power		18.10 kW
Net Power		17.80 kW
Max. torque / Engine rotation		86 Nm / 2400 rpm
Power source		Diesel
Battery voltage		12 V
Alternator		40 kW
Starter		1.70 kW
Hydraulics		
Standard flow - Auxiliary hydraulics		38.20 l/min
Auxiliary Hydraulic Pressure		145 bar
Tank capacities		
Fuel tank		29 l
Hydraulic tank capacity		27.30 l
Displacement		1.30 l
Noise and vibration		
Noise to environment (LwA)		101 dB
Noise at driving position (LpA)		85 dB
Whole-Body Vibration (ISO 2631-1)		1.05 m/s²
Vibration on hands/arms		< 1.53 m/s²

850R - Dimensional drawing

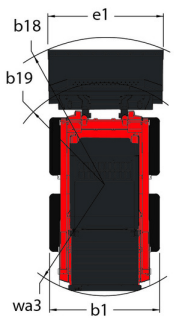

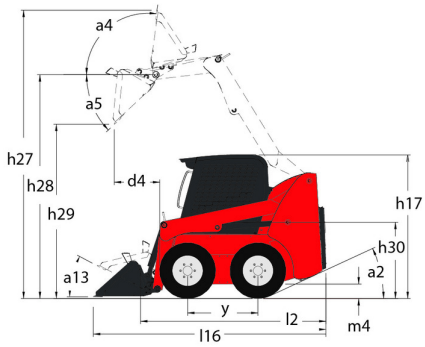

Equipment

—	
Integral Access Plate (removable)	Standard
Lifting function	
All-Tach® Attachment Mounting System	Standard
Auxiliary Hydraulics	Standard
Lighting	
Work Lights - Front and Rear	Standard
Motorization/Power	
Engine Block Heater	Optional
Operator station	
Cab Enclosure	Optional
Foot and Hand Throttles 2	Standard
Full-Suspension Seat	Optional
Gehl T-Bar Controls	Standard
Heating	Optional
Horn	Optional
ROPS/FOPS Level II Overhead Guard	Standard
Other options	
Hydrostatic Drive - Servo	Standard
Selectable Self-Leveling Hydraulic Lift Action 4	Optional
Security	
Anti-Vandalism Protection	Standard
Back-Up Alarm	Optional
Brake Control (Auto / Manual)	Standard
Hydraloc™ Safety System	Standard
Lift Arm Support Device	Standard
Operator Restraint Bar	Standard

Head Office
B.P. 249 - 430 rue de l'Aubinière
44150 Ancenis Cedex - France
Tel: +33 (0)2 40 09 10 11 - Fax: +33 (0)2 40 09 10 97
www.manitou.com

This publication provides a description of the configuration versions and options for Manitou products, which may differ for equipment. The equipment presented in this brochure may be part of a series, as an option, or it may not be available, depending on the versions. Manitou reserves the right, at any time and without notice, to amend the specifications described and represented. The specifications provided do not bind the manufacturer. For more details, please contact your Manitou agent. This is not a contractually binding document. The presentation of the products is not contractually binding. List of specifications non-exhaustive. The logos as well as the visual identity of the company are owned by Manitou and cannot be used without authorisation. All rights reserved. The photos and diagrams contained in this brochure are only provided for consultation and information purposes.
MANITOU BF SA - Limited company with board of directors - Share capital: 39,668,399 euros - 857 802 508 RCS Nantes