Technical sheet :

# M-X 50-2

MANITOU
HANDLING YOUR WORLD

| | Technical characteristics | | Metric |
|---|---|---|---|
| 1.1 | Manufacturer | | Manitou |
| 1.2 | Model Name | | M-X 50-2 |
| 1.3 | Power source | | Diesel |
| 1.4 | Operator type | | Seated |
| 1.5 | Max. capacity | Q | 5000 kg |
| 1.6 | Load center of gravity | c | 600 mm |
| 1.8 | Load distance, centre of drive axle to fork | x | 772 mm |
| 1.9 | Wheelbase | y | 2120 mm |
| | **Weight** | | |
| 2.1 | Service weight | | 7480 kg |
| 2.2 | Weight on front axle (laden) / rear axle (laden) | | 10895 kg / 1930 kg |
| 2.3 | Weight on front axle (Unladen) / rear axle (Unladen) | | 2645 kg / 5180 kg |
| | **Wheels** | | |
| 3.1 | Tires type | | Pneumatic |
| 3.3 | Dimensions of rear wheels | | 10R17,5 134/132M G291 |
| 3.5 | Number of front wheels / rear wheels | | 2 / 2 |
| 3.5.2 | Number of drive wheels | | 2 |
| 3.6 | Front wheel gauge | b10 | 1620 mm |
| | **Dimensions** | | |
| 4.7 | Height of overhead guard (cabin) | h6 | 2420 mm |
| 4.19 | Overall length | l1 | 4955 mm |
| 4.20 | Length to face of forks | l2 | 3755 mm |
| 4.21 | Overall width | b1 | 2060 mm |
| 4.23 | Fork carriage ISO 2328 (class/form) A/B | | 4A |
| 4.24 | Fork carriage width | b3 | 1670 mm |
| 4.31 | Ground clearance below mast | m1 | 265 mm |
| 4.32 | Ground clearance at centre of wheelbase | m2 | 365 mm |
| 4.35 | Turning radius | Wa | 3395 mm |
| | **Performances** | | |
| 5.1 | Travel speed (laden) | | 22.80 km/h |
| 5.2 | Lifting speed (laden / unladen) | | 0.40 m/s / 0.40 m/s |
| 5.3 | Lowering speed (laden / unladen) | | 0.50 m/s / 0.40 m/s |
| 5.5 | Drawbar pull (Laden / Unladen) | | 5685 daN / 3665 daN |
| 5.10 | Service brake | | Hydraulic |
| | **Engine** | | |
| 7.1 | Engine brand / model | | Perkins / 1104D-44T NL38894 |
| 7.3 | Rated speed | | 2360 rpm |
| | **Miscellaneous** | | |
| 8.1 | Type of drive control | | Hydraulic |

## M-X 50-2 - Dimensional drawing

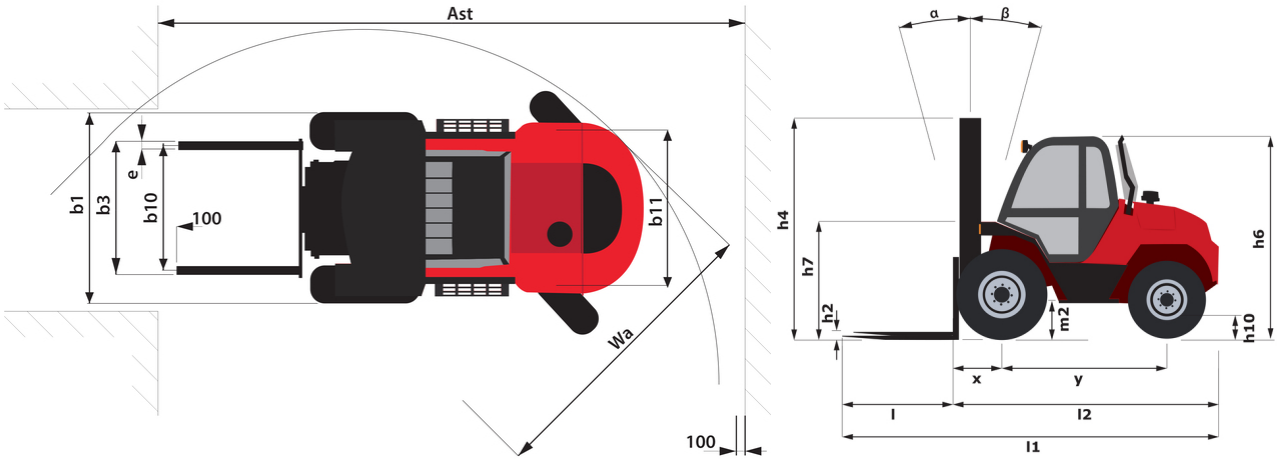

# Characteristics of masts and residual capacities

| Full Visibility Duplex (FVD) | | FVD 30 | FVD 33 | FVD 35 | FVD 37 | FVD 40 | FVD 45 | FVD 50 |
|---|---|---|---|---|---|---|---|---|
| α - Mast/fork carriage tilt, forward | ° | 15 | 15 | 15 | 15 | 15 | 15 | 15 |
| β - Mast/fork carriage tilt, backward | ° | 15 | 15 | 15 | 15 | 15 | 15 | 15 |
| h1 - Mast lowered height | mm | 2475 | 2625 | 2725 | 2825 | 2975 | 3225 | 3475 |
| h4 - Mast extended height | mm | 4025 | 4325 | 4525 | 4725 | 5025 | 5525 | 6025 |
| Height at max capacity | mm | 2500 | 2500 | 2500 | 2500 | 2500 | 2500 | 2500 |

| Free Lift Triplex (FLT) | | FLT 37 | FLT 40 | FLT 43 | FLT 45 | FLT 47 | FLT 50 | FLT 55 | FLT 60 |
|---|---|---|---|---|---|---|---|---|---|
| α - Mast/fork carriage tilt, forward | ° | 15 | 15 | 15 | 15 | 15 | 10 | 10 | 10 |
| β - Mast/fork carriage tilt, backward | ° | 15 | 15 | 15 | 15 | 15 | 15 | 15 | 15 |
| h1 - Mast lowered height | mm | 2225 | 2325 | 2425 | 2500 | 2560 | 2675 | 2825 | 3000 |
| h2 - Mast free lift | mm | 1265 | 1365 | 1465 | 1540 | 1600 | 1715 | 1865 | 2040 |
| h4 - Mast extended height | mm | 4725 | 5025 | 5325 | 5525 | 5725 | 6025 | 6525 | 7025 |
| Height at max capacity | mm | 2500 | 2500 | 2500 | 2500 | 2500 | 2500 | 2500 | 2500 |

MANITOU
HANDLING YOUR WORLD

**Head Office**
B.P. 249 - 430 rue de l'Aubinière
44150 Ancenis Cedex - France
Tel: +33 (0)2 40 09 10 11 - Fax: +33 (0)2 40 09 10 97
www.manitou.com

This publication provides a description of the configuration versions and options for Manitou products, which may differ for equipment. The equipment presented in this brochure may be part of a series, as an option, or it may not be available, depending on the versions. Manitou reserves the right, at any time and without notice, to amend the specifications described and represented. The specifications provided do not bind the manufacturer. For more details, please contact your Manitou agent. This is not a contractually binding document. The presentation of the products is not contractually binding. List of specifications non-exhaustive. The logos as well as the visual identity of the company are owned by Manitou and cannot be used without authorisation. All rights reserved. The photos and diagrams contained in this brochure are only provided for consultation and information purposes.
MANITOU BF SA - Limited company with board of directors - Share capital: 39,668,399 euros - 857 802 508 RCS Nantes