Technical sheet :

M-X 50-2

MANITOU
HANDLING YOUR WORLD

	Technical characteristics		Metric
1.1	Manufacturer		Manitou
1.2	Model Name		M-X 50-2
1.3	Power source		Diesel
1.4	Operator type		Seated
1.5	Max. capacity	Q	5000 kg
1.6	Load center of gravity	c	600 mm
1.8	Load distance, centre of drive axle to fork	x	772 mm
1.9	Wheelbase	y	2120 mm
	Weight		
2.1	Service weight		7480 kg
2.2	Weight on front axle (laden) / rear axle (laden)		10895 kg / 1930 kg
2.3	Weight on front axle (Unladen) / rear axle (Unladen)		2645 kg / 5180 kg
	Wheels		
3.1	Tires type		Pneumatic
3.3	Dimensions of rear wheels		10R17,5 134/132M G291
3.5	Number of front wheels / rear wheels		2 / 2
3.5.2	Number of drive wheels		2
3.6	Front wheel gauge	b10	1620 mm
	Dimensions		
4.7	Height of overhead guard (cabin)	h6	2420 mm
4.19	Overall length	l1	4955 mm
4.20	Length to face of forks	l2	3755 mm
4.21	Overall width	b1	2060 mm
4.23	Fork carriage ISO 2328 (class/form) A/B		4A
4.24	Fork carriage width	b3	1670 mm
4.31	Ground clearance below mast	m1	265 mm
4.32	Ground clearance at centre of wheelbase	m2	365 mm
4.35	Turning radius	Wa	3395 mm
	Performances		
5.1	Travel speed (laden)		22.80 km/h
5.2	Lifting speed (laden / unladen)		0.40 m/s / 0.40 m/s
5.3	Lowering speed (laden / unladen)		0.50 m/s / 0.40 m/s
5.5	Drawbar pull (Laden / Unladen)		5685 daN / 3665 daN
5.10	Service brake		Hydraulic
	Engine		
7.1	Engine brand / model		Perkins / 1104D-44T NL38894
7.3	Rated speed		2360 rpm
	Miscellaneous		
8.1	Type of drive control		Hydraulic

M-X 50-2 - Dimensional drawing

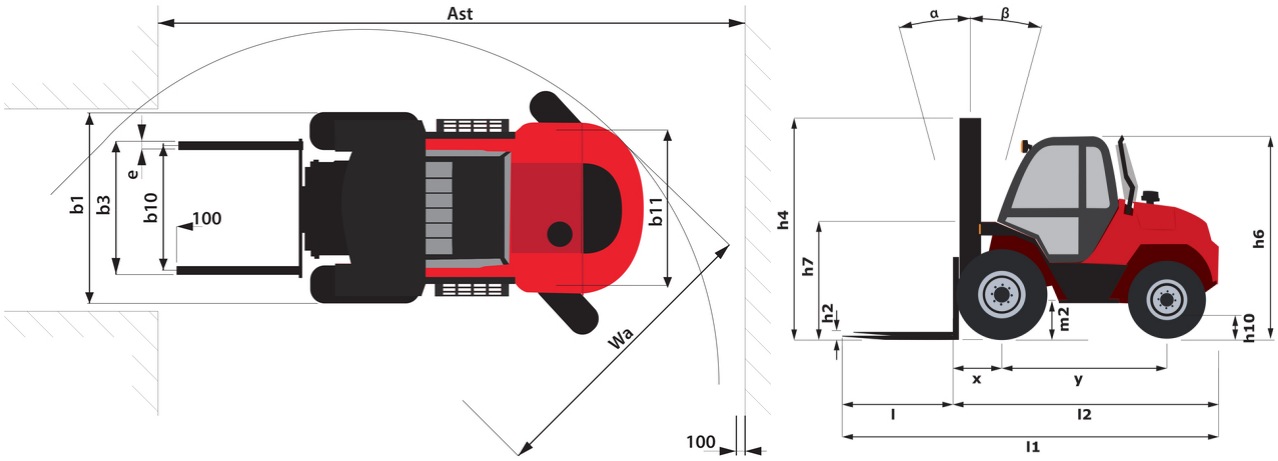

Characteristics of masts and residual capacities

Full Visibility Duplex (FVD)		FVD 30	FVD 33	FVD 35	FVD 37	FVD 40	FVD 45	FVD 50
α - Mast/fork carriage tilt, forward	°	15	15	15	15	15	15	15
β - Mast/fork carriage tilt, backward	°	15	15	15	15	15	15	15
h1 - Mast lowered height	mm	2475	2625	2725	2825	2975	3225	3475
h4 - Mast extended height	mm	4025	4325	4525	4725	5025	5525	6025
Height at max capacity	mm	2500	2500	2500	2500	2500	2500	2500

Free Lift Triplex (FLT)		FLT 37	FLT 40	FLT 43	FLT 45	FLT 47	FLT 50	FLT 55	FLT 60
α - Mast/fork carriage tilt, forward	°	15	15	15	15	15	10	10	10
β - Mast/fork carriage tilt, backward	°	15	15	15	15	15	15	15	15
h1 - Mast lowered height	mm	2225	2325	2425	2500	2560	2675	2825	3000
h2 - Mast free lift	mm	1265	1365	1465	1540	1600	1715	1865	2040
h4 - Mast extended height	mm	4725	5025	5325	5525	5725	6025	6525	7025
Height at max capacity	mm	2500	2500	2500	2500	2500	2500	2500	2500

MANITOU
HANDLING YOUR WORLD

Head Office
B.P. 249 - 430 rue de l'Aubinière
44150 Ancenis Cedex - France
Tel: +33 (0)2 40 09 10 11 - Fax: +33 (0)2 40 09 10 97
www.manitou.com

This publication provides a description of the configuration versions and options for Manitou products, which may differ for equipment. The equipment presented in this brochure may be part of a series, as an option, or it may not be available, depending on the versions. Manitou reserves the right, at any time and without notice, to amend the specifications described and represented. The specifications provided do not bind the manufacturer. For more details, please contact your Manitou agent. This is not a contractually binding document. The presentation of the products is not contractually binding. List of specifications non-exhaustive. The logos as well as the visual identity of the company are owned by Manitou and cannot be used without authorisation. All rights reserved. The photos and diagrams contained in this brochure are only provided for consultation and information purposes.
MANITOU BF SA - Limited company with board of directors - Share capital: 39,668,399 euros - 857 802 508 RCS Nantes