Technical sheet :

M-X 70-2

MANITOU
HANDLING YOUR WORLD

	Technical characteristics		Metric
1.1	Manufacturer		Manitou
1.2	Model Name		M-X 70-2
1.3	Power source		Diesel
1.4	Operator type		Seated
1.5	Max. capacity	Q	7000 kg
1.6	Load center of gravity	c	600 mm
1.8	Load distance, centre of drive axle to fork	x	803 mm
1.9	Wheelbase	y	2.49 m
	Weight		
2.1	Service weight		9880 kg
2.2	Weight on front axle (laden) / rear axle (laden)		14954 kg / 1926 kg
2.3	Weight on front axle (Unladen) / rear axle (Unladen)		4040 kg / 5840 kg
	Wheels		
3.1	Tires type		Pneumatic
3.2	Dimensions of front wheels		18R185 8T N20XF
3.3	Dimensions of rear wheels		265/70R19,5 6T P30 HT3
3.5	Number of front wheels / rear wheels		2 / 2
3.5.2	Number of drive wheels		2
3.6	Front wheel gauge	b10	1700 mm
3.7	Rear wheel gauge	b11	1545 m
	Dimensions		
4.7	Height of overhead guard (cabin)	h6	2475 mm
4.8	Seat height/stand height	h7	1485 mm
4.19	Overall length	l1	5700 mm
4.20	Length to face of forks	l2	4200 mm
4.21	Overall width	b1	2155 mm
4.22	Forks section x width x length	s / e / l	70 mm x 150 mm / 1200 mm
4.23	Fork carriage ISO 2328 (class/form) A/B		4A
4.24	Fork carriage width	b3	1750 mm
4.31	Ground clearance below mast	m1	300 mm
4.32	Ground clearance at centre of wheelbase	m2	410 mm
4.34	Aisle width for 800 x 1200 pallet lengthways	Ast	6703 mm
4.35	Turning radius	Wa	4200 mm
	Performances		
5.1	Travel speed (laden)		24 km/h
5.2.1	Lifting speed (unladen)		0.40 m/s
5.3.1	Lowering speed (unladen)		0.40 m/s
5.5	Drawbar pull (Laden)		7960 daN
5.10	Service brake		Hydraulic servo brake
	Engine		
7.1	Engine brand / model		Perkins / 1104D-44T NL38894

M-X 70-2 - Dimensional drawing

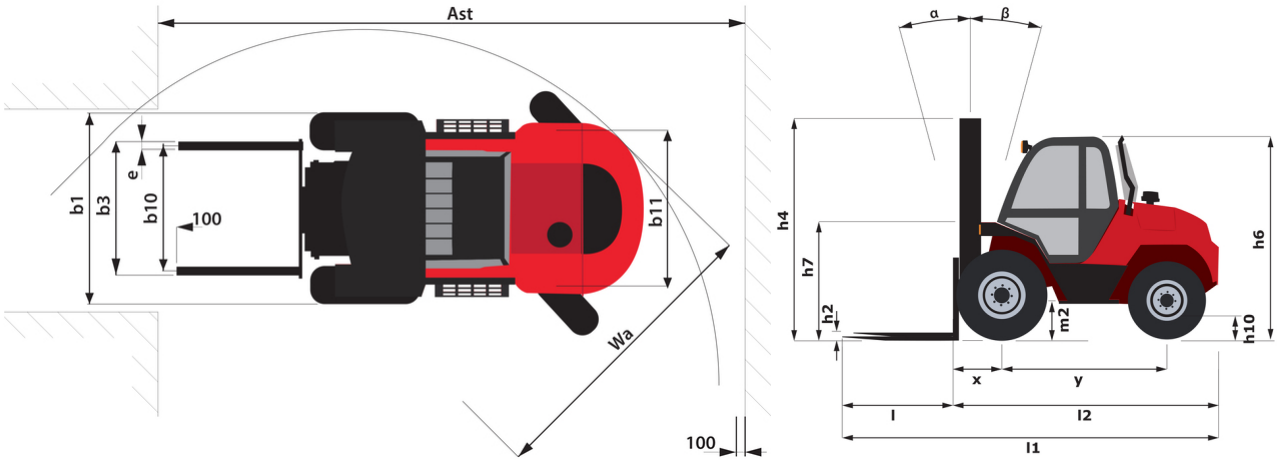

Characteristics of masts and residual capacities

Full Visibility Duplex (FVD)		FVD 36	FVD 40	FVD 45
α - Mast/fork carriage tilt, forward	°	15	15	15
β - Mast/fork carriage tilt, backward	°	15	15	15
h1 - Mast lowered height	mm	3145	3145	3595
h4 - Mast extended height	mm	4960	4960	5860
Residual capacity at max height	kg	7000	7000	6500
Residual capacity with integrated side shift at max heigth	kg	6300		
Height at max capacity	mm	2500	2500	2500

Head Office
B.P. 249 - 430 rue de l'Aubinière
44150 Ancenis Cedex - France
Tel: +33 (0)2 40 09 10 11 - Fax: +33 (0)2 40 09 10 97
www.manitou.com

This publication provides a description of the configuration versions and options for Manitou products, which may differ for equipment. The equipment presented in this brochure may be part of a series, as an option, or it may not be available, depending on the versions. Manitou reserves the right, at any time and without notice, to amend the specifications described and represented. The specifications provided do not bind the manufacturer. For more details, please contact your Manitou agent. This is not a contractually binding document. The presentation of the products is not contractually binding. List of specifications non-exhaustive. The logos as well as the visual identity of the company are owned by Manitou and cannot be used without authorisation. All rights reserved. The photos and diagrams contained in this brochure are only provided for consultation and information purposes.
MANITOU BF SA - Limited company with board of directors - Share capital: 39,668,399 euros - 857 802 508 RCS Nantes