Technical sheet :

EMA II 18 HL-2

MANITOU
HANDLING YOUR WORLD

	Technical characteristics		Metric
1.1	Manufacturer		Manitou
1.2	Model Name		EMA II 18 HL-2
1.3	Power source		Electrical
1.4	Operator type		Seated
1.5	Max. capacity	Q	1750 kg
1.6	Load center of gravity	c	500 mm
1.8	Load distance, centre of drive axle to fork	x	308 mm
1.9	Wheelbase	y	1745 mm
	Weight		
2.1	Service weight		8700 kg
2.2	Weight on front axle (laden) / rear axle (laden)		6330 kg / 4080 kg
2.3	Weight on front axle (Unladen) / rear axle (Unladen)		3480 kg / 5220 kg
	Wheels		
3.1	Tires type		Solid tires
3.2	Dimensions of front wheels		412 x 178
3.3	Dimensions of rear wheels		457 x 178
3.5	Number of front wheels / rear wheels		2 / 2
3.5.2	Number of drive wheels		2
3.6	Front wheel gauge	b10	1110 mm
3.7	Rear wheel gauge	b11	1350 mm
	Dimensions		
4.7	Height of overhead guard (cabin)	h6	2260 mm
4.8	Seat height/stand height	h7	1200 mm
4.19	Overall length	l1	3740 mm
4.20	Length to face of forks	l2	2590 mm
4.21	Overall width	b1	1350 mm
4.22	Forks section / width / length	s / e / l	40 mm x 125 mm x 1150 mm
4.23	Fork carriage ISO 2328 (class/form) A/B		2
4.24	Fork carriage width	b3	860 mm
4.31	Ground clearance below mast	m1	50 mm
4.32	Ground clearance at centre of wheelbase	m2	130 mm
4.33	Aisle Width for pallets 1000 x 1200 crossways	Ast	2000 mm
4.34	Aisle width for 800 x 1200 pallet lengthways	Ast	2200 mm
	Performances		
5.1	Travel speed (laden / unladen)		9 km/h-9.50 km/h
5.2	Lifting speed (laden / unladen)		0.35 m/s-0.45 m/s
5.3	Lowering speed (laden / unladen)		0.40 m/s-0.36 m/s
5.7	Gradeability (laden / unladen)		8 % / 10.50 %
5.10	Service brake		Hydraulic
	Engine		
6.1	Drive motor rating S2 60 min		10 kW
6.2	Lift motor rating at S3 15%		9 kW
6.3	Battery according to DIN 43531/35/36 A, B, C		DIN 43595
6.4	Battery voltage / capacity		48 V / 930 Ah
6.5	Battery weight (+/- 5%)		1300 kg
	Miscellaneous		
8.1	Type of drive control		Mosfet AC speed controller
8.2	Working hydraulic pressure for attachments		200 bar
8.3	Oil flow rate for attachments		25 l/min
8.4	Measured/guaranteed mean noise level at the ear of the operator		< 73 dB
8.4	Sound level at the driver's ear according to DIN 12 053		73 dB

EMA II 18 HL-2 - Dimensional drawing

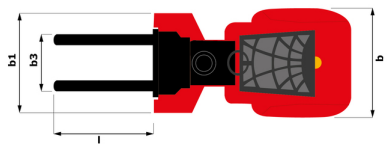

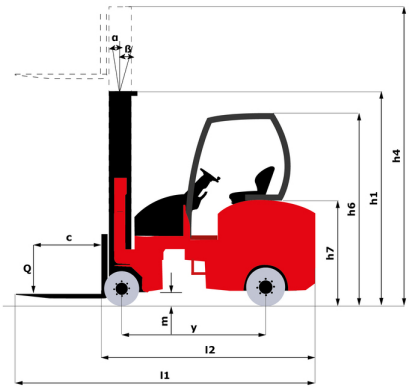

Characteristics of masts and residual capacities

Free Lift Triplex (FLT)		FLT 80	FLT 84	FLT 90	FLT 95	FLT 100	FLT 102	FLT 110	FLT 120	FLT 125	FLT 127
α - Mast/fork carriage tilt, forward	°	1	1	1	1	1	1	1	1	1	1
β - Mast/fork carriage tilt, backward	°	4	4	4	4	4	4	4	4	4	4
h1 - Mast lowered height	mm	3720	3900	4150	4270	4590	4690	5000	5340	5550	5570
h2 - Mast free lift	mm	2900	3080	3330	3650	3770	3870	4180	4520	4680	4750
h3 - Mast lifting height	mm	8010	8400	9000	9500	10020	10200	11010	12000	12510	12720
h4 - Mast extended height	mm	8840	9230	9830	10350	10850	11175	11985	13005	13485	13695
Residual capacity with integrated side shift at max heigth	kg	1250	1250	1250	1100	1100	1000	850	750	700	500

MANITOU
HANDLING YOUR WORLD

Head Office
B.P. 249 - 430 rue de l'Aubinière
44150 Ancenis Cedex - France
Tel: +33 (0)2 40 09 10 11 - Fax: +33 (0)2 40 09 10 97
www.manitou.com

This publication provides a description of the configuration versions and options for Manitou products, which may differ for equipment. The equipment presented in this brochure may be part of a series, as an option, or it may not be available, depending on the versions. Manitou reserves the right, at any time and without notice, to amend the specifications described and represented. The specifications provided do not bind the manufacturer. For more details, please contact your Manitou agent. This is not a contractually binding document. The presentation of the products is not contractually binding. List of specifications non-exhaustive. The logos as well as the visual identity of the company are owned by Manitou and cannot be used without authorisation. All rights reserved. The photos and diagrams contained in this brochure are only provided for consultation and information purposes.
MANITOU BF SA - Limited company with board of directors - Share capital: 39,668,399 euros - 857 802 508 RCS Nantes