Technical sheet :

EMA II 20 HD-2

MANITOU
HANDLING YOUR WORLD

	Technical characteristics		Metric
1.1	Manufacturer		Manitou
1.2	Model Name		EMA II 20 HD-2
1.3	Power source		Electrical
1.4	Operator type		Seated
1.5	Max. capacity	Q	2000 kg
1.6	Load center of gravity	c	500 mm
1.8	Load distance, centre of drive axle to fork	x	278 mm
1.9	Wheelbase	y	1745 mm
	Weight		
2.1	Service weight		8700 kg
2.2	Weight on front axle (laden) / rear axle (laden)		6330 kg / 4080 kg
2.3	Weight on front axle (Unladen) / rear axle (Unladen)		3480 kg / 5220 kg
	Wheels		
3.1	Tires type		Solid tires
3.2	Dimensions of front wheels		412 x 178
3.3	Dimensions of rear wheels		457 x 178
3.5	Number of front wheels / rear wheels		2 / 2
3.5.2	Number of drive wheels		2
3.6	Front wheel gauge	b10	1110 mm
3.7	Rear wheel gauge	b11	1370 mm
	Dimensions		
4.7	Height of overhead guard (cabin)	h6	2260 mm
4.8	Seat height/stand height	h7	1200 mm
4.19	Overall length	l1	3710 mm
4.20	Length to face of forks	l2	2560 mm
4.21	Overall width	b1	1350 mm
4.22	Forks section / width / length	s / e / l	40 mm x 125 mm x 1150 mm
4.23	Fork carriage ISO 2328 (class/form) A/B		2
4.24	Fork carriage width	b3	860 mm
4.31	Ground clearance below mast	m1	50 mm
4.32	Ground clearance at centre of wheelbase	m2	130 mm
4.33	Aisle Width for pallets 1000 x 1200 crossways	Ast	2000 mm
4.34	Aisle width for 800 x 1200 pallet lengthways	Ast	2200 mm
	Performances		
5.1	Travel speed (laden / unladen)		8.50 km/h-9 km/h
5.2	Lifting speed (laden / unladen)		0.35 m/s-0.45 m/s
5.3	Lowering speed (laden / unladen)		0.40 m/s-0.36 m/s
5.7	Gradeability (laden / unladen)		6 % / 8 %
5.10	Service brake		Hydraulic
	Engine		
6.1	Drive motor rating S2 60 min		10 kW
6.2	Lift motor rating at S3 15%		9 kW
6.3	Battery according to DIN 43531/35/36 A, B, C		DIN 43595
6.4	Battery voltage / capacity		48 V / 930 Ah
6.5	Battery weight (+/- 5%)		1300 kg
	Miscellaneous		
8.1	Type of drive control		Mosfet AC speed controller
8.2	Working hydraulic pressure for attachments		200 bar
8.3	Oil flow rate for attachments		25 l/min
8.4	Measured/guaranteed mean noise level at the ear of the operator		< 73 dB
8.4	Sound level at the driver's ear according to DIN 12 053		73 dB

EMA II 20 HD-2 - Dimensional drawing

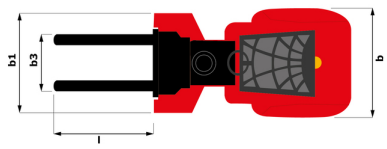

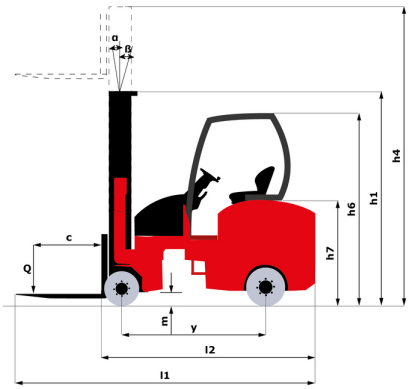

Characteristics of masts and residual capacities

Free Lift Triplex (FLT)		FLT 55	FLT 60	FLT 66	FLT 76	FLT 80	FLT 86	FLT 90	FLT 100	FLT 106
α - Mast/fork carriage tilt, forward	°	1	1	1	1	1	1	1	1	1
β - Mast/fork carriage tilt, backward	°	3	3	3	3	3	3	3	3	3
h1 - Mast lowered height	mm	2750	2900	3150	3590	3720	4020	4150	4590	4820
h2 - Mast free lift	mm	1930	2080	2330	2770	2900	3200	3330	3770	4000
h3 - Mast lifting height	mm	5500	6000	6600	7620	8010	8610	9000	10020	10560
h4 - Mast extended height	mm	3680	6830	7430	8450	8840	9440	9830	11000	11540
Residual capacity with integrated side shift at max heigth	kg	1500	1500	1450	1400	1350	1300	1250	1000	850

Head Office
B.P. 249 - 430 rue de l'Aubinière
44150 Ancenis Cedex - France
Tel: +33 (0)2 40 09 10 11 - Fax: +33 (0)2 40 09 10 97
www.manitou.com

This publication provides a description of the configuration versions and options for Manitou products, which may differ for equipment. The equipment presented in this brochure may be part of a series, as an option, or it may not be available, depending on the versions. Manitou reserves the right, at any time and without notice, to amend the specifications described and represented. The specifications provided do not bind the manufacturer. For more details, please contact your Manitou agent. This is not a contractually binding document. The presentation of the products is not contractually binding. List of specifications non-exhaustive. The logos as well as the visual identity of the company are owned by Manitou and cannot be used without authorisation. All rights reserved. The photos and diagrams contained in this brochure are only provided for consultation and information purposes.
MANITOU BF SA - Limited company with board of directors - Share capital: 39,668,399 euros - 857 802 508 RCS Nantes