Technical sheet :

ES 612 LI

MANITOU
HANDLING YOUR WORLD

	Technical characteristics		Metric
1.1	Manufacturer		Manitou
1.2	Model Name		ES 612 LI
1.3	Power source		Electrical
1.4	Operator type		Pedestrian
1.5	Max. capacity	Q	1200 kg
1.6	Load center of gravity	c	600 mm
1.8	Distance from Load backrest to center of rear axle	x	834 mm
1.9	Wheelbase	y	1492 mm
	Weight		
2.1	Service weight		1251 kg
2.2	Weight on front axle (laden) / rear axle (laden)		1295 kg / 1163 kg
2.3	Weight on front axle (Unladen) / rear axle (Unladen)		1328 kg / 1003 kg
	Wheels		
3.1	Tires type		Bandage
3.3	Number of load wheels / Size of load wheels		2 / 140x60
3.4	Number of stabilizer wheels / Size of the stabilizer wheels		1 / 140x60
3.5	Number of front wheels / rear wheels		2 / 4
3.5.2	Number of drive wheels / Size of drive wheels		1/230x70
3.6	Front wheel gauge	b10	529 mm
3.7	Rear wheel gauge	b11	380 mm
	Dimensions		
4.6	Initial lift	h5	110 mm
4.19	Overall length	l1	2162 mm
4.20	Length to face of forks	l2	973 mm
4.21	Overall width	b1	800 mm
4.22	Forks section / width / length	s / e / l	60 mm / 185 mm / 1190 mm
4.24	Fork carriage width	b3	700 mm
4.32	Ground clearance at centre of wheelbase	m2	30 mm
4.33	Aisle Width for pallets 1000 x 1200 crossways	Ast	2521 mm
4.34	Aisle width for 800 x 1200 pallet lengthways	Ast	2428 mm
4.35	Turning radius	Wa	1716 mm
4.9	Height tiller min. / max.	h14 / h14	750 mm / 1250 mm
	Performances		
5.1	Travel speed (laden / unladen)		4.50 km/h / 4.50 km/h
5.2	Lifting speed (laden / unladen)		0.18 m/s / 0.30 m/s
5.3	Lowering speed (laden / unladen)		0.27 m/s / 0.22 m/s
5.8	Max Gradeability (laden / unladen)		7 % / 10 %
5.10	Service brake		Electro magnetic
	Engine		
6.1	Drive motor rating S2 60 min		1.50 kW
6.2	Lift motor rating at S3 15%		3 kW
6.3	Battery according to DIN 43531/35/36 A, B, C		DIN 43535-B
6.4	Battery voltage / capacity		24 V / 180 Ah
6.5	Battery weight (+/- 5%)		189 kg
	Miscellaneous		
8.1	Type of drive control		AC
8.4	Sound level at the driver's ear according to DIN 12 053		65 dB

ES 612 LI - Dimensional drawing

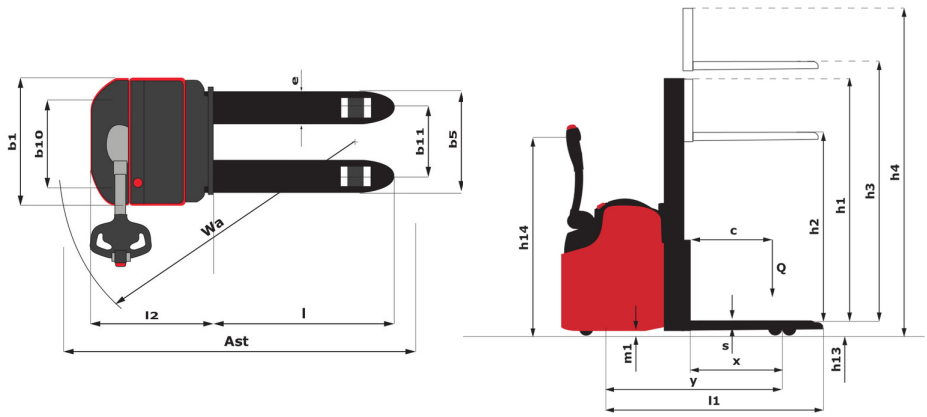

Characteristics of masts and residual capacities

Central Cylinder Simplex (CCS)		CCS 15	CCS 17
h1 - Mast lowered height	mm	1953	2203
h2 - Mast free lift	mm	1506	1756
h3 - Mast lifting height	mm	1506	1756
h4 - Mast extended height	mm	1960	2210
Residual capacity at max height	kg	1200	1200

Full Visibility Duplex (FVD)		FVD 29	FVD 34	FVD 38
h1 - Mast lowered height	mm	1953	2203	2403
h3 - Mast lifting height	mm	2936	3436	3836
h4 - Mast extended height	mm	3390	3890	4290
Residual capacity at max height	kg	1200	1050	800

Free Lift Duplex (FLD)		FLD 29	FLD 34
h1 - Mast lowered height	mm	1953	2203
h2 - Mast free lift	mm	1506	1756
h3 - Mast lifting height	mm	2931	3431
h4 - Mast extended height	mm	3385000	3885
Residual capacity at max height	kg	1200	1050

Free Lift Triplex (FLT)		FLT 42	FLT 45
h1 - Mast lowered height	mm	1911	2071
h2 - Mast free lift	mm	1466	1626
h3 - Mast lifting height	mm	4246	4726
h4 - Mast extended height	mm	4723	5203
Residual capacity at max height	kg	650	580

MANITOU
HANDLING YOUR WORLD

Head Office
B.P. 249 - 430 rue de l'Aubinière
44150 Ancenis Cedex - France
Tel: +33 (0)2 40 09 10 11 - Fax: +33 (0)2 40 09 10 97
www.manitou.com

This publication provides a description of the configuration versions and options for Manitou products, which may differ for equipment. The equipment presented in this brochure may be part of a series, as an option, or it may not be available, depending on the versions. Manitou reserves the right, at any time and without notice, to amend the specifications described and represented. The specifications provided do not bind the manufacturer. For more details, please contact your Manitou agent. This is not a contractually binding document. The presentation of the products is not contractually binding. List of specifications non-exhaustive. The logos as well as the visual identity of the company are owned by Manitou and cannot be used without authorisation. All rights reserved. The photos and diagrams contained in this brochure are only provided for consultation and information purposes.
MANITOU BF SA - Limited company with board of directors - Share capital: 39,668,399 euros - 857 802 508 RCS Nantes