Technical sheet :

ES-C 510

MANITOU
HANDLING YOUR WORLD

	Technical characteristics		Metric
1.1	Manufacturer		Manitou
1.2	Model Name		ES 510 GPF
1.3	Power source		Electrical
1.4	Operator type		Pedestrian
1.5	Max. capacity	Q	1000 kg
1.6	Load center of gravity	c	500 mm
1.8	Distance from Load backrest to center of rear axle	x	101 mm
1.9	Wheelbase	y	1047 mm
	Weight		
2.1	Service weight		1388 kg
	Wheels		
3.1	Tires type		Polyurethane
3.3	Number of load wheels / Size of load wheels		2 / 150x70
3.5	Number of front wheels / rear wheels		1 / 2
3.5.2	Number of drive wheels / Size of drive wheels		1/230x70
3.7	Rear wheel gauge	b11	826 mm
	Dimensions		
4.19	Overall length	l1	2278 mm
4.20	Length to face of forks	l2	1328 mm
4.21	Overall width	b1	923 mm
4.22	Forks section / width / length	s / e / l	35 mm / 100 mm / 800 mm
4.23	Fork carriage ISO 2328 (class/form) A/B		2B
4.24	Fork carriage width	b3	750 mm
4.31	Ground clearance below mast	m1	60 mm
4.32	Ground clearance at centre of wheelbase	m2	69 mm
4.35	Turning radius	Wa	1450 mm
4.9	Height tiller min. / max.	h14 / h14	830 mm / 1385 mm
	Performances		
5.1	Travel speed (laden / unladen)		4.50 km/h / 4.50 km/h
5.2	Lifting speed (laden / unladen)		0.30 m/s / 0.18 m/s
5.3	Lowering speed (laden / unladen)		0.22 m/s / 0.27 m/s
5.8	Max Gradeability (laden / unladen)		7 % / 10 %
5.10	Service brake		Electro magnetic
	Engine		
6.1	Drive motor rating S2 60 min		1.50 kW
6.2	Lift motor rating at S3 15%		3 kW
6.3	Battery according to DIN 43531/35/36 A, B, C		DIN 43535-B
6.4	Battery voltage / capacity		24 V / 375 Ah
6.5	Battery weight (+/- 5%)		293 kg
	Miscellaneous		
8.1	Type of drive control		AC
8.4	Sound level at the driver's ear according to DIN 12 053		65 dB

ES-C 510 - Dimensional drawing

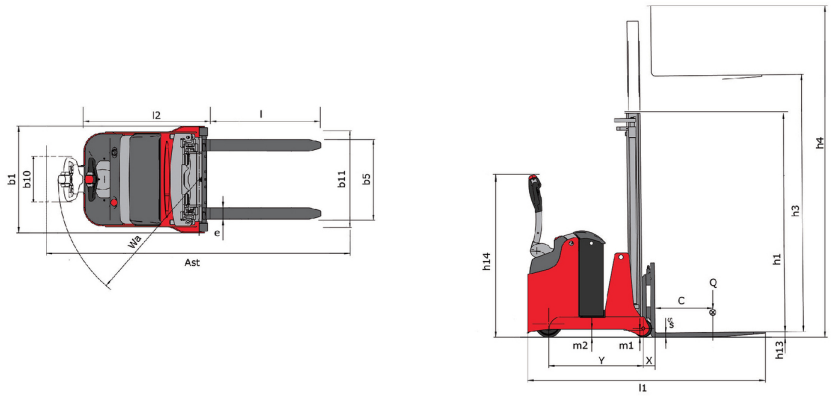

Characteristics of masts and residual capacities

Central Cylinder Simplex (CCS)		CCS 15	CCS 17
h1 - Mast lowered height	mm	1931	2181
h2 - Mast free lift	mm	1420	1670
h3 - Mast lifting height	mm	1420	1670
h4 - Mast extended height	mm	2070	2320
Residual capacity at max height	kg	1000	1000

Full Visibility Duplex (FVD)		FVD 29	FVD 34	FVD 38
h1 - Mast lowered height	mm	1931	2181	2381
h3 - Mast lifting height	mm	2850	3350	3750
h4 - Mast extended height	mm	3500	4000	4400
Residual capacity at max height	kg	1000	1000	900

Free Lift Duplex (FLD)		FLD 29	FLD 34
h1 - Mast lowered height	mm	1931	2181
h2 - Mast free lift	mm	1420	1670
h3 - Mast lifting height	mm	2850	3355
h4 - Mast extended height	mm	3500	4000
Residual capacity at max height	kg	1000	1000

Free Lift Triplex (FLT)		FLT 42
h1 - Mast lowered height	mm	1956
h2 - Mast free lift	mm	1380
h3 - Mast lifting height	mm	4160
h4 - Mast extended height	mm	4810
Residual capacity at max height	kg	800

Head Office
B.P. 249 - 430 rue de l'Aubinière
44150 Ancenis Cedex - France
Tel: +33 (0)2 40 09 10 11 - Fax: +33 (0)2 40 09 10 97
www.manitou.com

This publication provides a description of the configuration versions and options for Manitou products, which may differ for equipment. The equipment presented in this brochure may be part of a series, as an option, or it may not be available, depending on the versions. Manitou reserves the right, at any time and without notice, to amend the specifications described and represented. The specifications provided do not bind the manufacturer. For more details, please contact your Manitou agent. This is not a contractually binding document. The presentation of the products is not contractually binding. List of specifications non-exhaustive. The logos as well as the visual identity of the company are owned by Manitou and cannot be used without authorisation. All rights reserved. The photos and diagrams contained in this brochure are only provided for consultation and information purposes.
MANITOU BF SA - Limited company with board of directors - Share capital: 39,668,399 euros - 857 802 508 RCS Nantes