Technical sheet :

ES 412 ET

MANITOU
HANDLING YOUR WORLD

	Technical characteristics		Metric
1.1	Manufacturer		Manitou
1.2	Model Name		ES 412 ET
1.3	Power source		Electrical
1.4	Operator type		Pedestrian
1.5	Max. capacity	Q	1200 kg
1.6	Load center of gravity	c	600 mm
1.8	Distance from Load backrest to center of rear axle	x	683 mm
1.9	Wheelbase	y	1245 mm
	Weight		
2.1	Service weight		874 kg
2.2	Weight on front axle (laden) / rear axle (laden)		729 kg / 1342 kg
2.3	Weight on front axle (Unladen) / rear axle (Unladen)		612 kg / 262 kg
	Wheels		
3.1	Tires type		Polyurethane
3.3	Number of load wheels / Size of load wheels		2 / 82x50
3.4	Number of stabilizer wheels / Size of the stabilizer wheels		1 / 125x70
3.5	Number of front wheels / rear wheels		2 / 2
3.5.2	Number of drive wheels / Size of drive wheels		1/230x75
3.6	Front wheel gauge	b10	517 mm
3.7	Rear wheel gauge	b11	380 mm
	Dimensions		
4.15	Fork height in low position	h13	85 mm
4.19	Overall length	l1	1870 mm
4.20	Length to face of forks	l2	720 mm
4.21	Overall width	b1	800 mm
4.22	Forks section / width / length	s / e / l	180 mm / 60 mm / 1150 mm
4.24	Fork carriage width	b3	680 m
4.31	Ground clearance below mast	m1	35 mm
4.32	Ground clearance at centre of wheelbase	m2	20 mm
4.35	Turning radius	Wa	1400 mm
	Performances		
5.1	Travel speed (laden / unladen)		6 km/h / 6 km/h
5.2	Lifting speed (laden / unladen)		0.10 m/s / 0.16 m/s
5.3	Lowering speed (laden / unladen)		0.14 m/s / 0.12 m/s
5.8	Max Gradeability (laden / unladen)		8 % / 10 %
5.10	Service brake		Electro magnetic
	Engine		
6.1	Drive motor rating S2 60 min		1 kW
6.2	Lift motor rating at S3 15%		2 kW
6.3	Battery according to DIN 43531/35/36 A, B, C		DIN 43535-B
6.4	Battery voltage / capacity		24 V / 160 Ah
6.5	Battery weight (+/- 5%)		150 kg
	Miscellaneous		
8.1	Type of drive control		AC
8.4	Sound level at the driver's ear according to DIN 12 053		65 dB

ES 412 ET - Dimensional drawing

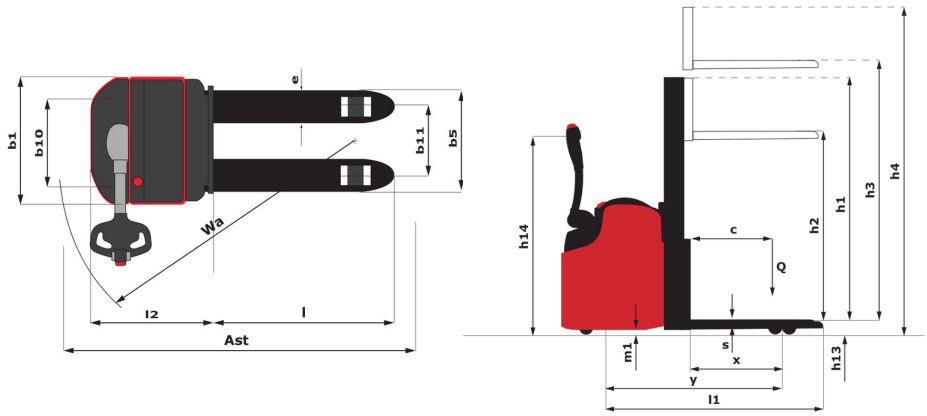

Characteristics of masts and residual capacities

Central Cylinder Duplex (CCD)		CCD 26	CCD 29	CCD 34
h1 - Mast lowered height	mm	1780	1930	2180
h2 - Mast free lift	mm	140	140	140
h3 - Mast lifting height	mm	2630	2930	3430
h4 - Mast extended height	mm	3065	3365	3865
Residual capacity at max height	kg	1200	1200	1000

Central Cylinder Simplex (CCS)		CCS 15	CCS 17
h1 - Mast lowered height	mm	1930	2180
h2 - Mast free lift	mm	1500	1750
h3 - Mast lifting height	mm	1500	1750
h4 - Mast extended height	mm	1930	2180
Residual capacity at max height	kg	1200	1200

MANITOU
HANDLING YOUR WORLD

Head Office
B.P. 249 - 430 rue de l'Aubinière
44150 Ancenis Cedex - France
Tel: +33 (0)2 40 09 10 11 - Fax: +33 (0)2 40 09 10 97
www.manitou.com

This publication provides a description of the configuration versions and options for Manitou products, which may differ for equipment. The equipment presented in this brochure may be part of a series, as an option, or it may not be available, depending on the versions. Manitou reserves the right, at any time and without notice, to amend the specifications described and represented. The specifications provided do not bind the manufacturer. For more details, please contact your Manitou agent. This is not a contractually binding document. The presentation of the products is not contractually binding. List of specifications non-exhaustive. The logos as well as the visual identity of the company are owned by Manitou and cannot be used without authorisation. All rights reserved. The photos and diagrams contained in this brochure are only provided for consultation and information purposes.
MANITOU BF SA - Limited company with board of directors - Share capital: 39,668,399 euros - 857 802 508 RCS Nantes