Technical sheet :

ES 616 LI (5PTS)

MANITOU
HANDLING YOUR WORLD

	Technical characteristics		Metric
1.1	Manufacturer		Manitou
1.2	Model Name		ES 616 LI (5pts)
1.3	Power source		Electrical
1.4	Operator type		Pedestrian
1.5	Max. capacity	Q	1600 kg
1.6	Load center of gravity	c	600 mm
1.8	Distance from Load backrest to center of rear axle	x	729 mm
1.9	Wheelbase	y	1393 mm
	Weight		
2.1	Service weight		1280 kg
2.2	Weight on front axle (laden) / rear axle (laden)		1070 kg / 1855 kg
2.3	Weight on front axle (Unladen) / rear axle (Unladen)		905 kg / 375 kg
	Wheels		
3.1	Tires type		Polyurethane
3.3	Number of load wheels / Size of load wheels		4 / 82 x 68
3.4	Number of stabilizer wheels / Size of the stabilizer wheels		2 / 120 x 54
3.5	Number of front wheels / rear wheels		3 / 4
3.5.2	Number of drive wheels / Size of drive wheels		1/230x70
3.6	Front wheel gauge	b10	558 mm
3.7	Rear wheel gauge	b11	380 mm
	Dimensions		
4.6	Initial lift	h5	110 mm
4.15	Fork height in low position	h13	86 mm
4.19	Overall length	l1	1995 mm
4.20	Length to face of forks	l2	846 mm
4.21	Overall width	b1	800 mm
4.22	Forks section / width / length	s / e / l	60 mm / 185 mm / 1150 mm
4.24	Fork carriage width	b3	700 mm
4.32	Ground clearance at centre of wheelbase	m2	24 mm
4.33	Aisle Width for pallets 1000 x 1200 crossways	Ast	2399 mm
4.34	Aisle width for 800 x 1200 pallet lengthways	Ast	2402 mm
4.35	Turning radius	Wa	1597 mm
4.9	Height tiller min. / max.	h14 / h14	750 mm / 1250 mm
	Performances		
5.1	Travel speed (laden / unladen)		6 km/h / 6 km/h
5.2	Lifting speed (laden / unladen)		0.18 m/s / 0.30 m/s
5.3	Lowering speed (laden / unladen)		0.27 m/s / 0.22 m/s
5.8	Max Gradeability (laden / unladen)		7 % / 10 %
5.10	Service brake		Electro magnetic
	Engine		
6.1	Drive motor rating S2 60 min		1.50 kW
6.2	Lift motor rating at S3 15%		3 kW
6.3	Battery according to DIN 43531/35/36 A, B, C		DIN 43535-B
6.4	Battery voltage / capacity		24 V / 180 Ah
6.5	Battery weight (+/- 5%)		220 kg
	Miscellaneous		
8.1	Type of drive control		AC
8.4	Sound level at the driver's ear according to DIN 12 053		65 dB

ES 616 LI (5pts) - Dimensional drawing

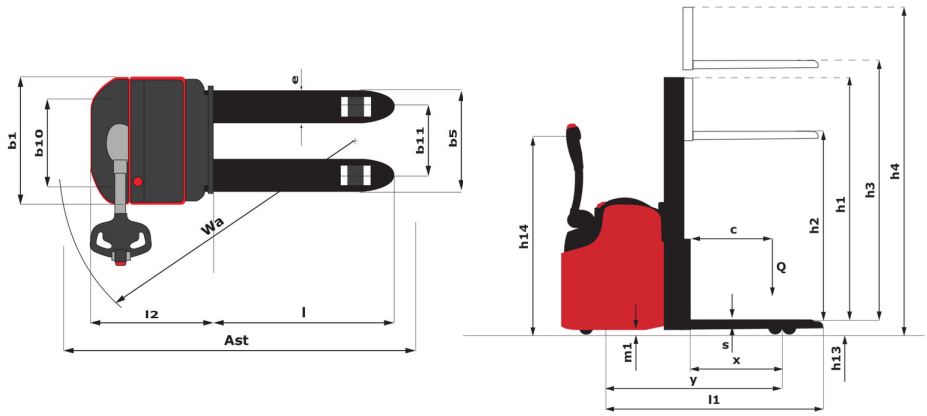

Characteristics of masts and residual capacities

Central Cylinder Simplex (CCS)		CCS 15	CCS 17
h1 - Mast lowered height	mm	1953	2203
h2 - Mast free lift	mm	1506	1756
h3 - Mast lifting height	mm	1506	1756
h4 - Mast extended height	mm	1960	2210
Residual capacity at max height	kg	1600	1600

Free Lift Duplex (FLD)		FLD 29	FLD 34
h1 - Mast lowered height	mm	1953	2203
h2 - Mast free lift	mm	1506	1756
h3 - Mast lifting height	mm	2931	3431
h4 - Mast extended height	mm	3385	3885
Residual capacity at max height	kg	1300	1000

Free Lift Triplex (FLT)		FLT 42
h1 - Mast lowered height	mm	1911
h2 - Mast free lift	mm	1466
h3 - Mast lifting height	mm	4246
h4 - Mast extended height	mm	4723
Residual capacity at max height	kg	600

MANITOU
HANDLING YOUR WORLD

Head Office
B.P. 249 - 430 rue de l'Aubinière
44150 Ancenis Cedex - France
Tel: +33 (0)2 40 09 10 11 - Fax: +33 (0)2 40 09 10 97
www.manitou.com

This publication provides a description of the configuration versions and options for Manitou products, which may differ for equipment. The equipment presented in this brochure may be part of a series, as an option, or it may not be available, depending on the versions. Manitou reserves the right, at any time and without notice, to amend the specifications described and represented. The specifications provided do not bind the manufacturer. For more details, please contact your Manitou agent. This is not a contractually binding document. The presentation of the products is not contractually binding. List of specifications non-exhaustive. The logos as well as the visual identity of the company are owned by Manitou and cannot be used without authorisation. All rights reserved. The photos and diagrams contained in this brochure are only provided for consultation and information purposes.
MANITOU BF SA - Limited company with board of directors - Share capital: 39,668,399 euros - 857 802 508 RCS Nantes