Technical sheet :

ES-C 711

MANITOU
HANDLING YOUR WORLD

	Technical characteristics		Metric
1.1	Manufacturer		Manitou
1.2	Model Name		ES-C 711
1.3	Power source		Electrical
1.4	Operator type		Pedestrian
1.5	Max. capacity	Q	1100 kg
1.6	Load center of gravity	c	500 mm
1.8	Distance from Load backrest to center of rear axle	x	157 mm
1.9	Wheelbase	y	940 mm
	Weight		
2.1	Service weight		2300 kg
2.2	Weight on front axle (laden) / rear axle (laden)		475 kg / 2910 kg
2.3	Weight on front axle (Unladen) / rear axle (Unladen)		1250 kg / 1050 kg
	Wheels		
3.1	Tires type		Polyurethane
3.3	Number of load wheels / Size of load wheels		2 / 250x100
3.5	Number of front wheels / rear wheels		1 / 2
3.5.2	Number of drive wheels / Size of drive wheels		1/254x100
3.7	Rear wheel gauge	b11	1003 mm
	Dimensions		
4.15	Fork height in low position	h13	40 mm
4.19	Overall length	l1	2430 mm
4.20	Length to face of forks	l2	1280 mm
4.21	Overall width	b1	1120 mm
4.22	Forks section / width / length	s / e / l	35 mm / 100 mm / 1150 mm
4.24	Fork carriage width	b3	750 mm
4.31	Ground clearance below mast	m1	31 mm
4.32	Ground clearance at centre of wheelbase	m2	52 mm
4.35	Turning radius	Wa	1305 mm
4.9	Height tiller min. / max.	h14 / h14	1005 mm / 1405 mm
	Performances		
5.1	Travel speed (laden / unladen)		6 km/h / 6 km/h
5.2	Lifting speed (laden / unladen)		0.11 m/s / 0.20 m/s
5.3	Lowering speed (laden / unladen)		0.22 m/s / 0.21 m/s
5.8	Max Gradeability (laden / unladen)		5 % / 8 %
5.10	Service brake		Electro magnetic
	Engine		
6.1	Drive motor rating S2 60 min		2 kW
6.2	Lift motor rating at S3 15%		4 kW
6.3	Battery according to DIN 43531/35/36 A, B, C		DIN 43535-B
6.4	Battery voltage / capacity		24 V / 315 Ah
6.5	Battery weight (+/- 5%)		275 kg
	Miscellaneous		
8.1	Type of drive control		DC
8.4	Sound level at the driver's ear according to DIN 12 053		65 dB

ES-C 711 - Dimensional drawing

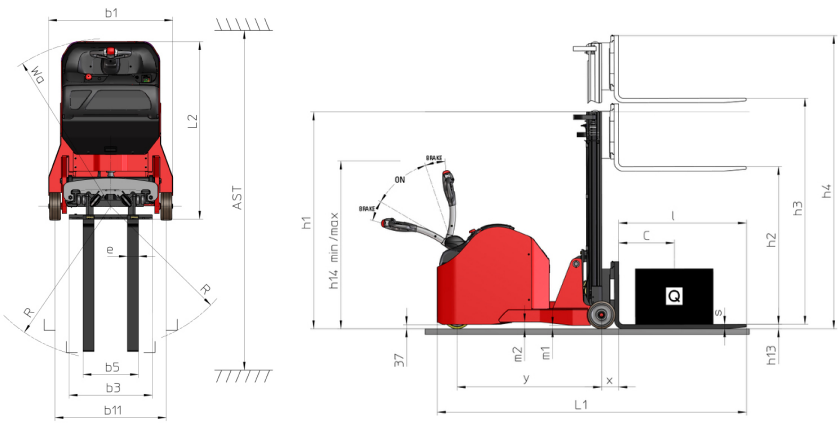

Characteristics of masts and residual capacities

Central Cylinder Simplex (CCS)		CCS 15	CCS 17
h1 - Mast lowered height	mm	1955	2205
h2 - Mast free lift	mm	1465	1715
h3 - Mast lifting height	mm	1465	1715
h4 - Mast extended height	mm	2030	2280
Residual capacity at max height	kg	1100	1100

Full Visibility Duplex (FVD)		FVD 29	FVD 34	FVD 38
α - Mast/fork carriage tilt, forward	°	3	3	3
h1 - Mast lowered height	mm	1955	2205	2405
h3 - Mast lifting height	mm	2890	3390	3790
h4 - Mast extended height	mm	3455	3955	4355
Residual capacity at max height	kg	1100	1100	1100

Free Lift Duplex (FLD)		FLD 29	FLD 34
h1 - Mast lowered height	mm	1955	2205
h2 - Mast free lift	mm	1465	1715
h3 - Mast lifting height	mm	2890	3390
h4 - Mast extended height	mm	3455	3955
Residual capacity at max height	kg	1100	1100

Free Lift Triplex (FLT)		FLT 42	FLT 47	FLT 54
h1 - Mast lowered height	mm	1915	2075	2315
h2 - Mast free lift	mm	1425	1585	1835
h3 - Mast lifting height	mm	4205	4685	5415
h4 - Mast extended height	mm	4770	5250	5980
Residual capacity at max height	kg	850	650	400

Head Office
B.P. 249 - 430 rue de l'Aubinière
44150 Ancenis Cedex - France
Tel: +33 (0)2 40 09 10 11 - Fax: +33 (0)2 40 09 10 97
www.manitou.com

This publication provides a description of the configuration versions and options for Manitou products, which may differ for equipment. The equipment presented in this brochure may be part of a series, as an option, or it may not be available, depending on the versions. Manitou reserves the right, at any time and without notice, to amend the specifications described and represented. The specifications provided do not bind the manufacturer. For more details, please contact your Manitou agent. This is not a contractually binding document. The presentation of the products is not contractually binding. List of specifications non-exhaustive. The logos as well as the visual identity of the company are owned by Manitou and cannot be used without authorisation. All rights reserved. The photos and diagrams contained in this brochure are only provided for consultation and information purposes.
MANITOU BF SA - Limited company with board of directors - Share capital: 39,668,399 euros - 857 802 508 RCS Nantes