Technical sheet :

# MLA 6-65 H-Z




MANITOU
HANDLING YOUR WORLD

| Capacities | | Imperial |
|---|---|---|
| Static tipping load with bucket (straight) | | 6409 lb |
| Static tipping load with bucket (full turn) | | 4916 lb |
| Static tipping load with forks (straight) | | 4980 lb |
| Static tipping load with forks (full turn) | | 3920 lb |
| Max. height of bucket pivot point | h35 | 10 ft 11 in |
| Max. lifting height (below forks) | h3 | 10 ft 3 in |
| Breakout force with bucket | | 5743 daN |
| **Weight and dimensions** | | |
| Unladen weight (with forks) with 4-post canopy | | 9149 lb |
| Unladen weight (with forks) | | 9500 lb |
| Wheelbase | y | 6 ft 7 in |
| Overall width of 4 posts canopy | b22 | 4 ft 2 in |
| Overall cab width | b4 | 4 ft 2 in |
| Overall height with FOPS removed and ROPS folded | h36 | 6 ft 6 in |
| Overall height with 4 posts canopy | h38 | 8 ft 1 in |
| Overall height with cab | h17 | 8 ft 1 in |
| Tilt-up angle | a4 | 45 ° |
| Tilt-down angle | a5 | 45 ° |
| Articulation angle | a19 | 45 ° |
| Overall width less bucket | b1 | 5 ft 5 in |
| Overall length - Less Bucket | l2 | 14 ft |
| Ground clearance | m4 | 1 ft 3 in |
| **Engine** | | |
| Engine brand | | Yanmar |
| Engine model | | 4TNV98CT_PGWL1 |
| Engine norm | | Stage V |
| Number of cylinders / Capacity of cylinders | | 4 - 201 in³ |
| Engine power (Hp / kW) | | 65 Hp / 48.50 kW |
| Max. torque / Engine rotation | | 207 ft/lbs / 1560 rpm |
| Engine cooling system | | 2 radiators water + hydraulic oil |
| **Transmission** | | |
| Transmission type | | Hydrostatic |
| Number of gears (forward / reverse) | | 2 / 2 |
| Max. travel speed (may vary according to applicable regulations) | | 19 mph |
| Travel speed (laden) | | 12 mph |
| Differential lock | | Front and rear locking of the machine |
| Parking brake | | Manual |
| Service brake | | Hydraulic drum brake on front axle, acting on all 4 wheels |
| **Hydraulics** | | |
| Hydraulic pump type | | Gear pump |
| Hydraulic flow - Pressure | | 18 US gpm / 2901 PSI |
| High-Flow Option (l/min) | | 26 US gpm |
| Drive hydraulic system pressure | | 6092 PSI |
| **Tank capacities** | | |
| Hydraulic oil | | 20 US gal |
| Fuel tank capacity | | 25 US gal |
| **Noise and vibration** | | |
| Vibration on hands/arms | | < 8 ft/s² |
| **Miscellaneous** | | |
| Cab certification | | ROPS - FOPS cab (level 1) |

# Options / Finishing

S : Standard / O : Optional / - : Not available

| | Essential | Classic | Premium |
|---|---|---|---|
| **Lifting function** | | | |
| Attachment hydraulic line | S | S | S |
| Boom suspension "Active CRC" | O | O | S |
| Hydraulic attachment locking | S | - | S |
| **Operator station** | | | |
| Adjustable and telescopic steering column | S | S | S |
| Air suspension seat | - | O | S |
| Canopy | S | - | - |
| Closed cab with heating | - | S | S |
| Floor mat | S | S | S |
| Tuner car radio - 50W | - | S | S |
| **Motorization/Power** | | | |
| Continuous flow hydraulics | S | S | S |
| Hand throttle | S | S | S |
| Self-cleaning air pre-filter | S | S | S |
| Speed control | O | O | S |
| Third speed | O | O | S |
| **Lighting** | | | |
| Complete road lighting | O | S | S |
| Flat Led Rotating Beacon | O | O | O |
| Front and rear work lights | S | S | - |
| LED front work lights + LED rear work lights | O | O | S |

## MLA 6-65 H-Z - Dimensional drawing

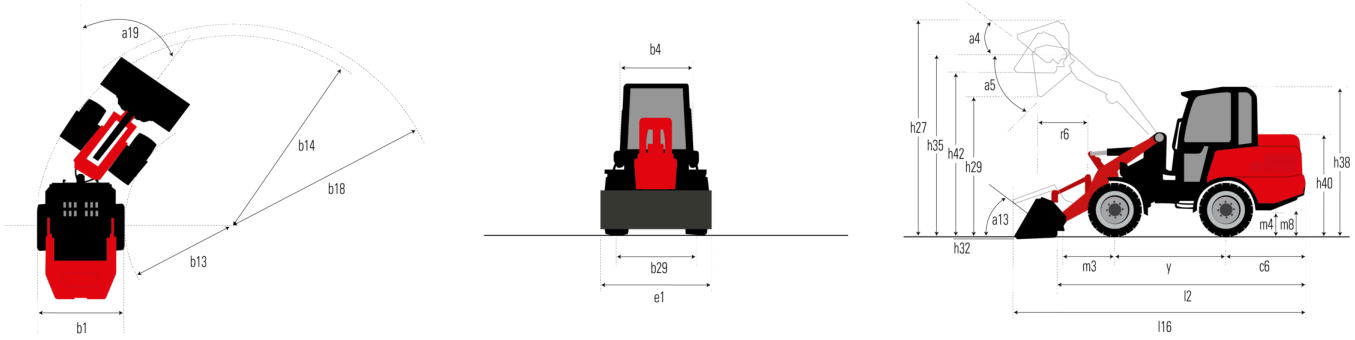

**Head Office**
B.P. 249 - 430 rue de l'Aubinière
44150 Ancenis Cedex - France
Tel: +33 (0)2 40 09 10 11 - Fax: +33 (0)2 40 09 10 97
www.manitou.com



This publication provides a description of the configuration versions and options for Manitou products, which may differ for equipment. The equipment presented in this brochure may be part of a series, as an option, or it may not be available, depending on the versions. Manitou reserves the right, at any time and without notice, to amend the specifications described and represented. The specifications provided do not bind the manufacturer. For more details, please contact your Manitou agent. This is not a contractually binding document. The presentation of the products is not contractually binding. List of specifications non-exhaustive. The logos as well as the visual identity of the company are owned by Manitou and cannot be used without authorisation. All rights reserved. The photos and diagrams contained in this brochure are only provided for consultation and information purposes.
MANITOU BF SA - Limited company with board of directors - Share capital: 39,668,399 euros - 857 802 508 RCS Nantes