Technical sheet :

MHT-X 12330

MANITOU
HANDLING YOUR WORLD

Capacities		Metric
Max. capacity		33000 kg
Load center of gravity	c	1200 mm
Max. lifting height		11.92 m
Max. outreach		6.60 m
Weight and dimensions		
Overall length	l1	10.77 m
Unladen weight (with forks)		49000 kg
Ground clearance	m4	0.59 m
Wheelbase	y	4.90 m
Length to face of forks	l2	8.37 m
Overall width	b1	2.98 m
Overall height	h17	3.60 m
Overall cab width	b4	0.97 m
Tilt-up angle	a4	10 °
Tilt-down angle	a5	100 °
External turning radius (over tyres)	Wa1	7.42 m
Outer turning radius (with forks)	b15	9.33 m
Forks length / width / section	l / e / s	2400 mm x 250 mm x 110 mm
Frame leveling corrector	a9	6 °
Wheels		
Standard tires		21.00 R35
Number of front wheels / rear wheels		2 / 2
Drive wheels (front / rear)		2 / 2
Steering mode		2 wheel steer, 4 wheel steer, Crab mode
Engine		
Engine brand		Deutz
Engine norm		Stage III / Tier 3
Engine model		TCD 6.1 L6
Number of cylinders / Capacity of cylinders		6 - 6100 cm³
I.C. Engine power rating / Power		245 Hp / 180 kW
Max. torque / Engine rotation		1000 Nm@1450 rpm
Engine cooling system		Water
Number of batteries		2
Battery voltage		12 V
Drawbar pull		28400 daN
Transmission		
Transmission type		Hydrostatic with Powershift
Number of gears (forward / reverse)		3 / 3
Max. travel speed		25 km/h
Parking brake		Automatic negative parking brake
Service brake		Oil-immersed multi-discs braking on front & rear axles
Gradeability (laden)		36 %
Hydraulics		
Hydraulic pump type		Variable displacement pump
Hydraulic flow - Pressure		310 l/min - 350 bar
Tank capacities		
Engine oil		21 l
Fuel tank		600 l
Noise and vibration		
Noise to environment (LwA)		110 dB
Vibration on hands/arms		< 2.50 m/s²
Noise at driving position (LpA) tested following NF EN 12053 norm		71 dB
Miscellaneous		
Safety cab homologation		Cabin ROPS - FOPS level 2
Controls		JSM
Attachment recognition system (E-Reco)		Standard

MHT-X 12330 - Dimensional drawing

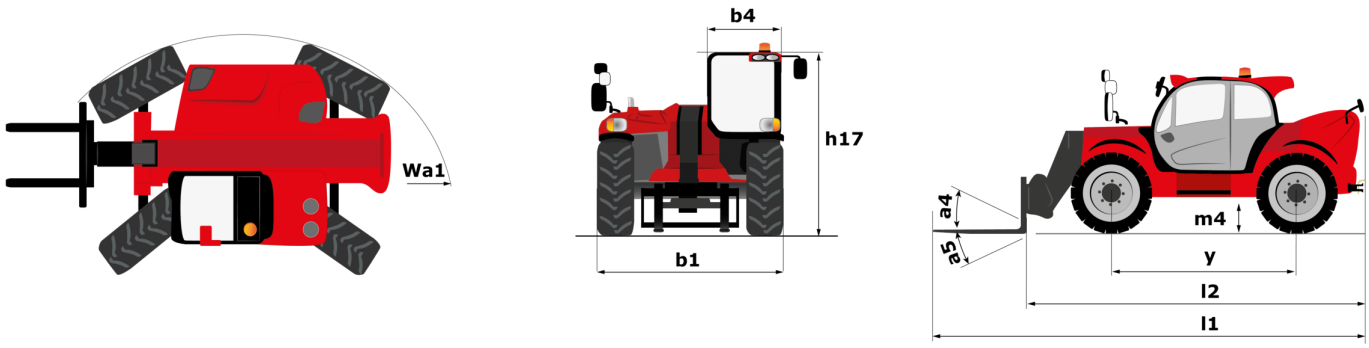

Head Office
B.P. 249 - 430 rue de l'Aubinière
44150 Ancenis Cedex - France
Tel: +33 (0)2 40 09 10 11 - Fax: +33 (0)2 40 09 10 97
www.manitou.com

This publication provides a description of the configuration versions and options for Manitou products, which may differ for equipment. The equipment presented in this brochure may be part of a series, as an option, or it may not be available, depending on the versions. Manitou reserves the right, at any time and without notice, to amend the specifications described and represented. The specifications provided do not bind the manufacturer. For more details, please contact your Manitou agent. This is not a contractually binding document. The presentation of the products is not contractually binding. List of specifications non-exhaustive. The logos as well as the visual identity of the company are owned by Manitou and cannot be used without authorisation. All rights reserved. The photos and diagrams contained in this brochure are only provided for consultation and information purposes.
MANITOU BF SA - Limited company with board of directors - Share capital: 39,668,399 euros - 857 802 508 RCS Nantes