Technical sheet :

ULM 415 H

MANITOU
HANDLING YOUR WORLD

Capacities		Metric
Max. capacity	Q	1500 kg
Max. lifting height	h3	4.30 m
Max. outreach		2.62 m
Reach at max. height		1 m
Breakout force with bucket		1880 daN
Weight and dimensions		
Shipping mass (min. / max.)		2700 kg / 2900 kg
Ground clearance	m4	0.29 m
Wheelbase	y	2.13 m
Overall length to carriage (with hitch)	l11	3.47 m
Overall length to carriage (without hitch)	l3	3.47 m
Front overhang		0.77 m
Overall width	b1	1.49 m
Overall cab width	b4	0.66 m
Overall height	h17	1.92 m
Tilt-down angle	a5	116 °
Tilt-up angle	a4	23 °
External turning radius (over tyres)	Wa1	2.62 m
Standard tires		CAMSO - MPT 552 - 10.0/75-15.3 124A8
Performances		
Lifting		8.80 s
Lowering		7 s
Extension		6.40 s
Retraction		4.30 s
Crowd		3.40 s
Dump		2.60 s
Engine		
Engine brand		Yanmar
Engine norm		Stage V / Tier 4 final
Engine model		3TNV88C-DMU
Number of cylinders - Capacity of cylinders		3 - 1642 cm³
I.C. Engine power rating / Power		35.10 Hp / 26.20 kW
Max. torque / Engine rotation		105 Nm @1950 rpm
Drawbar pull (Laden)		2000 daN
Reversible fan		Option
Engine cooling system		3 radiators (water + hydraulic oil + fuel)
HVO validated (according to EN 15940 standard)		Yes
Transmission		
Transmission type		Hydrostatic
Number of gears (forward / reverse)		2 / 2
Max. travel speed (may vary according to applicable regulations)		25 km/h
Differential lock		Limited slip differential on front and rear axles
Parking brake		Automatic negative parking brake
Service brake		Hydraulic servo brake
Hydraulics		
Hydraulic pump type		Gear pump
Hydraulic flow - Pressure		48 l/min - 235 bar
Flow sharing distributor		Standard
Tank capacities		
Hydraulic tank capacity		39 l
Fuel tank		35 l
Noise and vibration		
Noise at driving position (LpA) tested following NF EN 12053 norm		76 dB
Noise to environment (LwA)		104 dB
Vibration on hands/arms		< 2.50 m/s²
Miscellaneous		
Safety cab homologation		ROPS - FOPS cab (level 1)
Controls		JSM

Optional tires tab

	Overall height	Overall width
ALLIANCE - A550 - 305/70 R16.5 141A5	1.95 m	1.49 m
CAMSO - SKS732 - 12-16.5 145A2	1.96 m	1.49 m
MICHELIN - BIBSTEEL ALL TERRAIN - 300/70 R16.5 141A5	1.96 m	1.50 m
MICHELIN - BIBSTEEL HARD SURFACE - 300/70 R16.5 137A8	1.96 m	1.50 m
MITAS - TR-07 - 31x15.50-15 121A8	1.93 m	1.56 m

ULM 415 H - Dimensional drawing

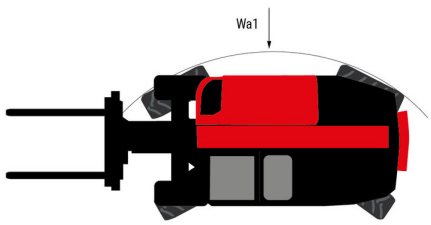

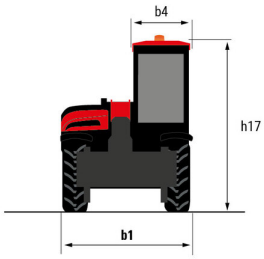

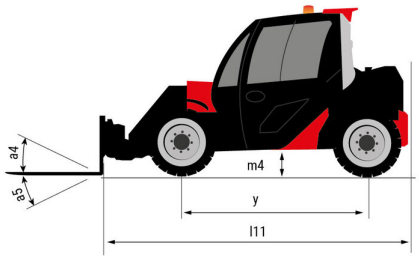

ULM 415 H - Load chart

Machine on tires with forks Metric

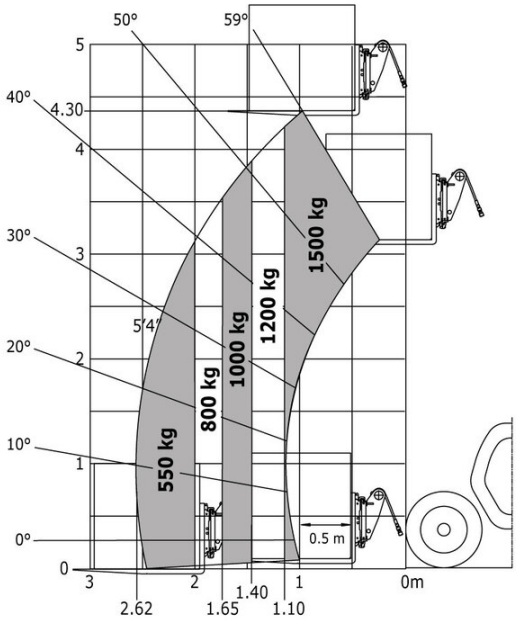

Head Office
B.P. 249 - 430 rue de l'Aubinière
44150 Ancenis Cedex - France
Tel: +33 (0)2 40 09 10 11 - Fax: +33 (0)2 40 09 10 97
www.manitou.com

This publication provides a description of the configuration versions and options for Manitou products, which may differ for equipment. The equipment presented in this brochure may be part of a series, as an option, or it may not be available, depending on the versions. Manitou reserves the right, at any time and without notice, to amend the specifications described and represented. The specifications provided do not bind the manufacturer. For more details, please contact your Manitou agent. This is not a contractually binding document. The presentation of the products is not contractually binding. List of specifications non-exhaustive. The logos as well as the visual identity of the company are owned by Manitou and cannot be used without authorisation. All rights reserved. The photos and diagrams contained in this brochure are only provided for consultation and information purposes.
MANITOU BF SA - Limited company with board of directors - Share capital: 39,668,399 euros - 857 802 508 RCS Nantes