Technical sheet :

# ULM 415 H

MANITOU
HANDLING YOUR WORLD

| Capacities | | Metric |
|---|---|---|
| Max. capacity | Q | 1500 kg |
| Max. lifting height | | 4.30 m |
| Maximum outreach | | 2.62 m |
| Reach at max. height | | 1 m |
| Breakout force with bucket | | 1880 daN |
| **Weight and dimensions** | | |
| Shipping mass (min. / max.) | | 2700 kg / 2900 kg |
| Ground clearance | m4 | 0.29 m |
| Wheelbase | y | 2.13 m |
| Overall length to carriage (with hitch) | l11 | 3.47 m |
| Overall length to carriage (without hitch) | l3 | 3.47 m |
| Front overhang | | 0.77 m |
| Overall width | b1 | 1.49 m |
| Overall cab width | b4 | 0.66 m |
| Overall height | h17 | 1.92 m |
| Tilt-down angle | a5 | 116 ° |
| Tilt-up angle | a4 | 23 ° |
| External turning radius (over tyres) | Wa1 | 2.62 m |
| Standard tires | | CAMSO - MPT 552 - 10.0/75-15.3 124A8 |
| Steering mode | | 2 wheel steer, 4 wheel steer, Crab mode |
| **Performances** | | |
| Lifting | | 8.80 s |
| Lowering | | 7 s |
| Extension | | 6.40 s |
| Retraction | | 4.30 s |
| Crowd | | 3.40 s |
| Dump | | 2.60 s |
| **Engine** | | |
| Engine brand | | Yanmar |
| Engine norm | | Stage V, Tier 4 final |
| Engine model | | 3TNV88C-DMU |
| Number of cylinders - Capacity of cylinders | | 3 - 1642 cm³ |
| Engine power (Hp / kW) | | 35.10 Hp / 26.20 kW |
| Max. torque / Engine rotation | | 105 Nm @1950 rpm |
| Drawbar pull (Laden) | | 2000 daN |
| Reversible fan | | Option |
| Engine cooling system | | 3 radiators (water + hydraulic oil + fuel) |
| HVO validated (according to EN 15940 standard) | | Yes |
| **Transmission** | | |
| Transmission type | | Hydrostatic |
| Number of gears (forward / reverse) | | 2 / 2 |
| Max. travel speed (may vary according to applicable regulations) | | 25 km/h |
| Differential lock | | Limited slip differential on front and rear axles |
| Parking brake | | Automatic negative parking brake |
| Service brake | | Hydraulic servo brake |
| **Hydraulics** | | |
| Hydraulic pump type | | Gear pump |
| Hydraulic flow - Pressure | | 48 l/min - 235 bar |
| Flow sharing distributor | | Standard |
| **Tank capacities** | | |
| Hydraulic tank capacity | | 39 l |
| Fuel | | 35 l |
| **Noise and vibration** | | |
| Noise at driving position (LpA) tested following NF EN 12053 norm | | 76 dB |
| Noise to environment (LwA) | | 104 dB |
| Vibration on hands/arms | | < 2.50 m/s² |
| **Miscellaneous** | | |
| Cab certification | | ROPS - FOPS cab (level 1) |
| Controls | | JSM |

# Optional tires tab

| | Overall height | Overall width |
|---|---|---|
| ALLIANCE - A550 - 305/70 R16.5 141A5 | 1.95 m | 1.49 m |
| CAMSO - SKS732 - 12-16.5 145A2 | 1.96 m | 1.49 m |
| MICHELIN - BIBSTEEL ALL TERRAIN - 300/70 R16.5 141A5 | 1.96 m | 1.50 m |
| MICHELIN - BIBSTEEL HARD SURFACE - 300/70 R16.5 137A8 | 1.96 m | 1.50 m |
| MITAS - TR-07 - 31x15.50-15 121A8 | 1.93 m | 1.56 m |

# ULM 415 H - Dimensional drawing

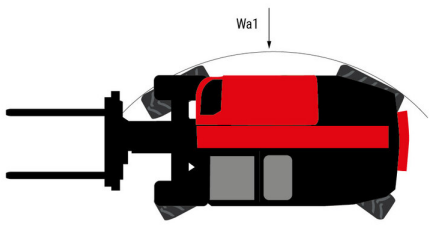


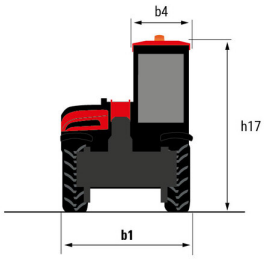


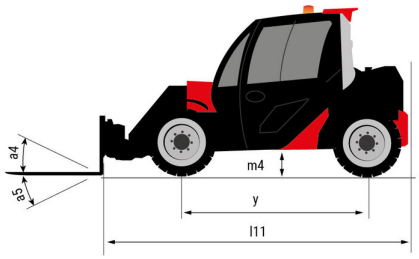


# ULM 415 H - Load chart

## Machine on tires with forks Metric

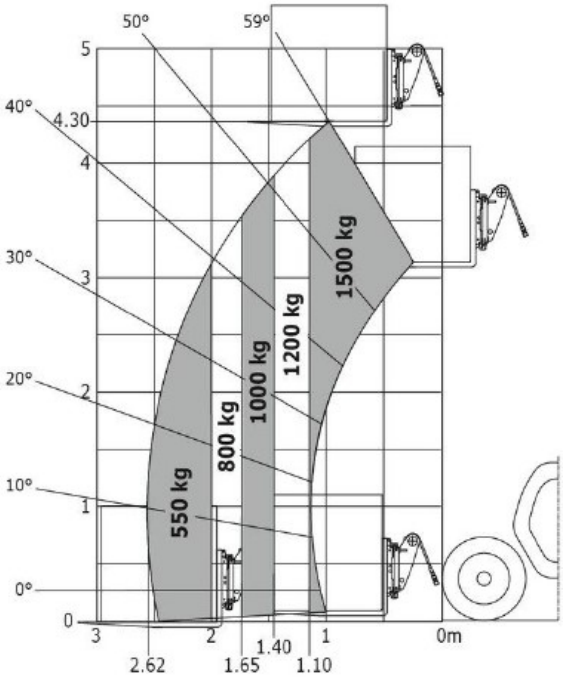


## Machine on tires with forks LC 600 mm Metric

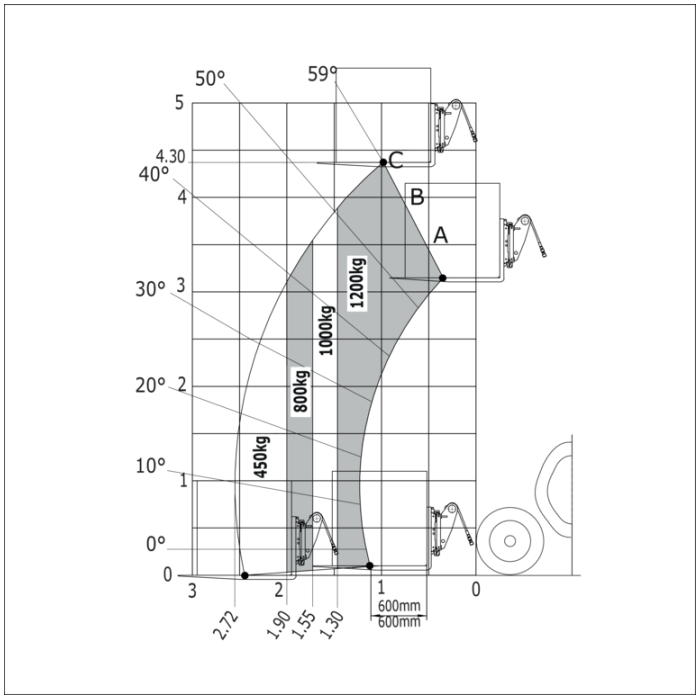

**Head Office**
B.P. 249 - 430 rue de l'Aubinière
44150 Ancenis Cedex - France
Tel: +33 (0)2 40 09 10 11 - Fax: +33 (0)2 40 09 10 97
www.manitou.com

This publication provides a description of the configuration versions and options for Manitou products, which may differ for equipment. The equipment presented in this brochure may be part of a series, as an option, or it may not be available, depending on the versions. Manitou reserves the right, at any time and without notice, to amend the specifications described and represented. The specifications provided do not bind the manufacturer. For more details, please contact your Manitou agent. This is not a contractually binding document. The presentation of the products is not contractually binding. List of specifications non-exhaustive. The logos as well as the visual identity of the company are owned by Manitou and cannot be used without authorisation. All rights reserved. The photos and diagrams contained in this brochure are only provided for consultation and information purposes.
MANITOU BF SA - Limited company with board of directors - Share capital: 39,668,399 euros - 857 802 508 RCS Nantes